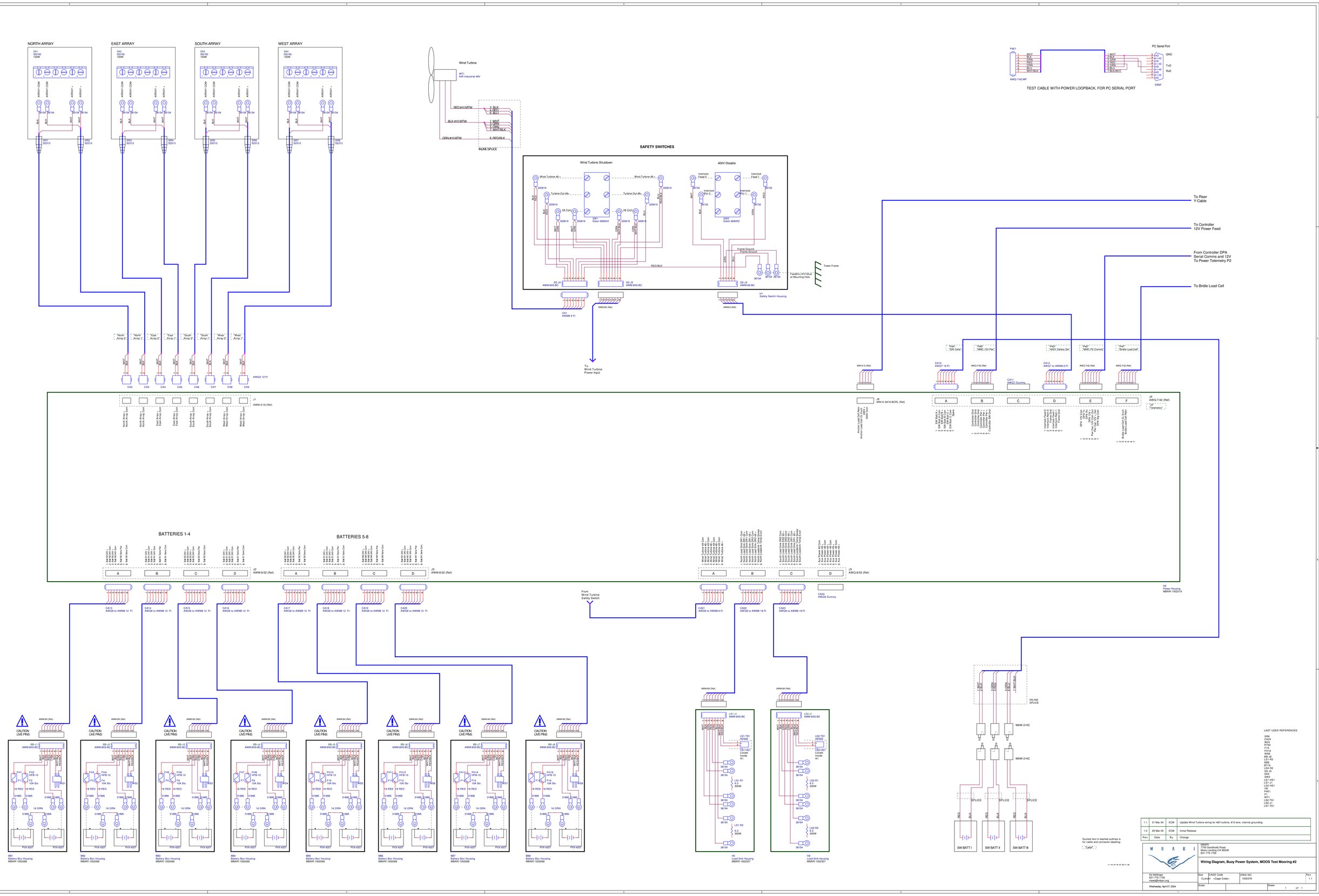

LAST USED REFERENCES

SR8
CA24
W24
CA24
F18
FH16
W24
BS-8
LS1-R2
BS8
BT19
LS2-R2
SS-J5
SA4
SW2
LS1-HS1
HE
LS2-HS1
HE
PC
P1
WT1
LS2-TS1
LS2-J1
LS1-TS1

Rev	Date	By	Change
1.1	31 Mar 04	ECM	Update Wind Turbine wiring for 48V turbine, #10 wire, internal grounding
1.0	29 Mar 04	ECM	Initial Release

Quoted text in dashed outlines is for cable and connector labelling:

"Label"

MBARI
7700 Sandholdt Road
Moss Landing CA 95039
831-775-1700

Wiring Diagram, Buoy Power System, MOOS Test Mooring #2

Ed Mellinger
831-775-1730
maed@mbari.org

Wednesday, April 07, 2004

Size	CAGE Code	DWG NO	Rev
Custom	<Cage Code>	1002378	1.1

Scale | Sheet 1 of 1