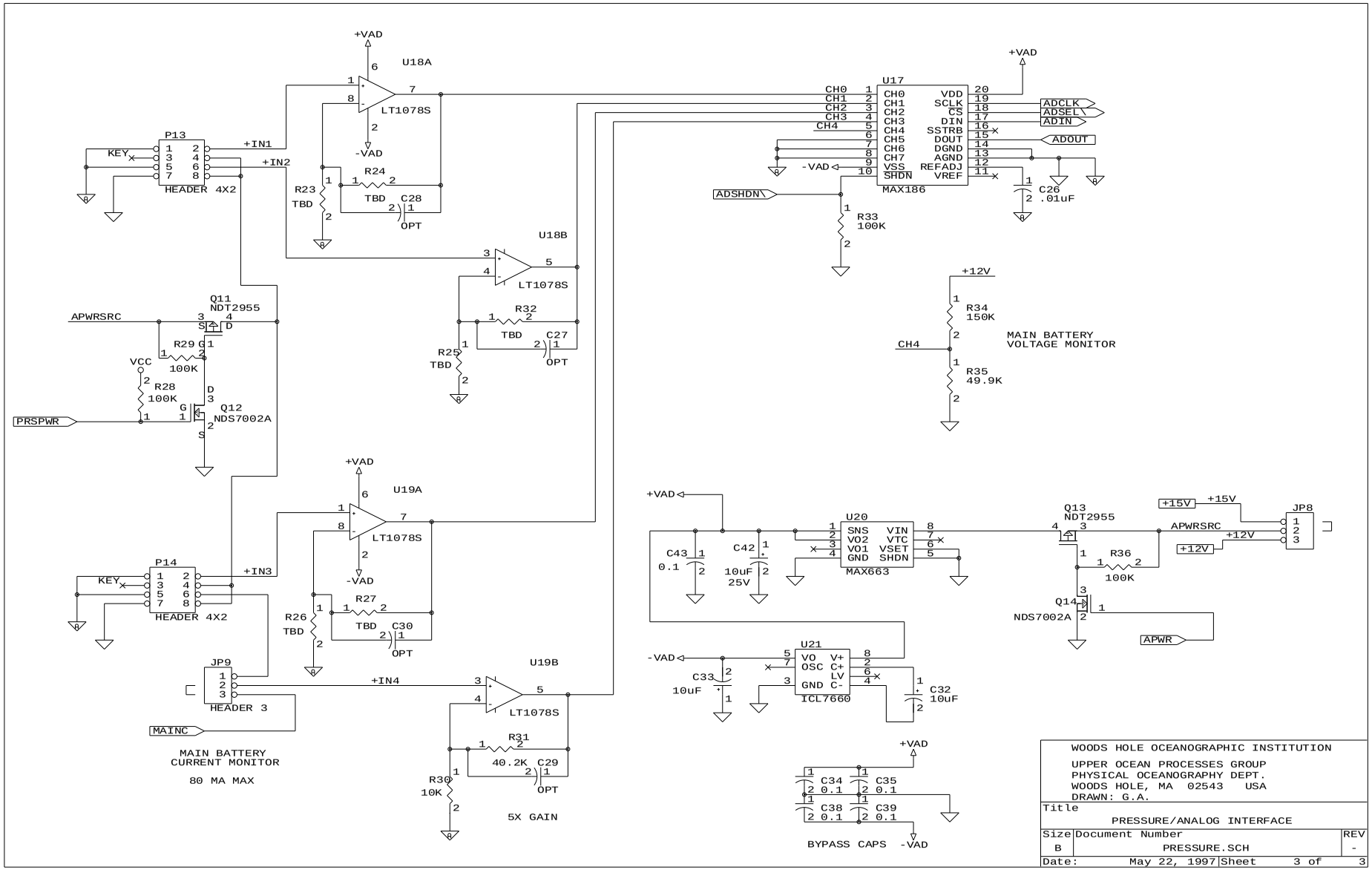
+VAD
U18A
LT1078S
-VAD
P13
KEY
HEADER 4X2
+IN1
+IN2
R23
TBD
R24
TBD
C28
OPT
U18B
LT1078S
R32
TBD
C27
OPT
R25
TBD
Q11
NDT2955
APWRSRC
R29
100K
VCC
R28
100K
PRSPWR
Q12
NDS7002A
U19A
LT1078S
P14
KEY
HEADER 4X2
+IN3
R26
TBD
R27
TBD
C30
OPT
JP9
HEADER 3
MAINC
MAIN BATTERY
CURRENT MONITOR
80 MA MAX
+IN4
U19B
LT1078S
R31
40.2K
C29
OPT
R30
10K
5X GAIN
U17
CH0
CH1
CH2
CH3
CH4
CH5
CH6
CH7
VSS
SHDN
VDD
SCLK
CS
DIN
SSTRB
DOUT
DGND
AGND
REFADJ
VREF
MAX186
ADCLK
ADSEL
ADIN
ADOUT
ADSHDN
R33
100K
C26
.01uF
+12V
R34
150K
CH4
R35
49.9K
MAIN BATTERY
VOLTAGE MONITOR
C43
0.1
C42
10uF
25V
U20
SNS
VO2
VO1
GND
VIN
VTC
VSET
SHDN
MAX663
Q13
NDT2955
APWRSRC
+15V
JP8
R36
100K
Q14
NDS7002A
APWR
U21
VO
OSC
GND
V+
C+
LV
C-
ICL7660
C33
10uF
C32
10uF
C34
0.1
C35
0.1
C38
0.1
C39
0.1
BYPASS CAPS
WOODS HOLE OCEANOGRAPHIC INSTITUTION
UPPER OCEAN PROCESSES GROUP
PHYSICAL OCEANOGRAPHY DEPT.
WOODS HOLE, MA 02543 USA
DRAWN: G.A.
Title
PRESSURE/ANALOG INTERFACE
Size
B
Document Number
PRESSURE.SCH
REV
-
Date: May 22, 1997
Sheet 3 of 3