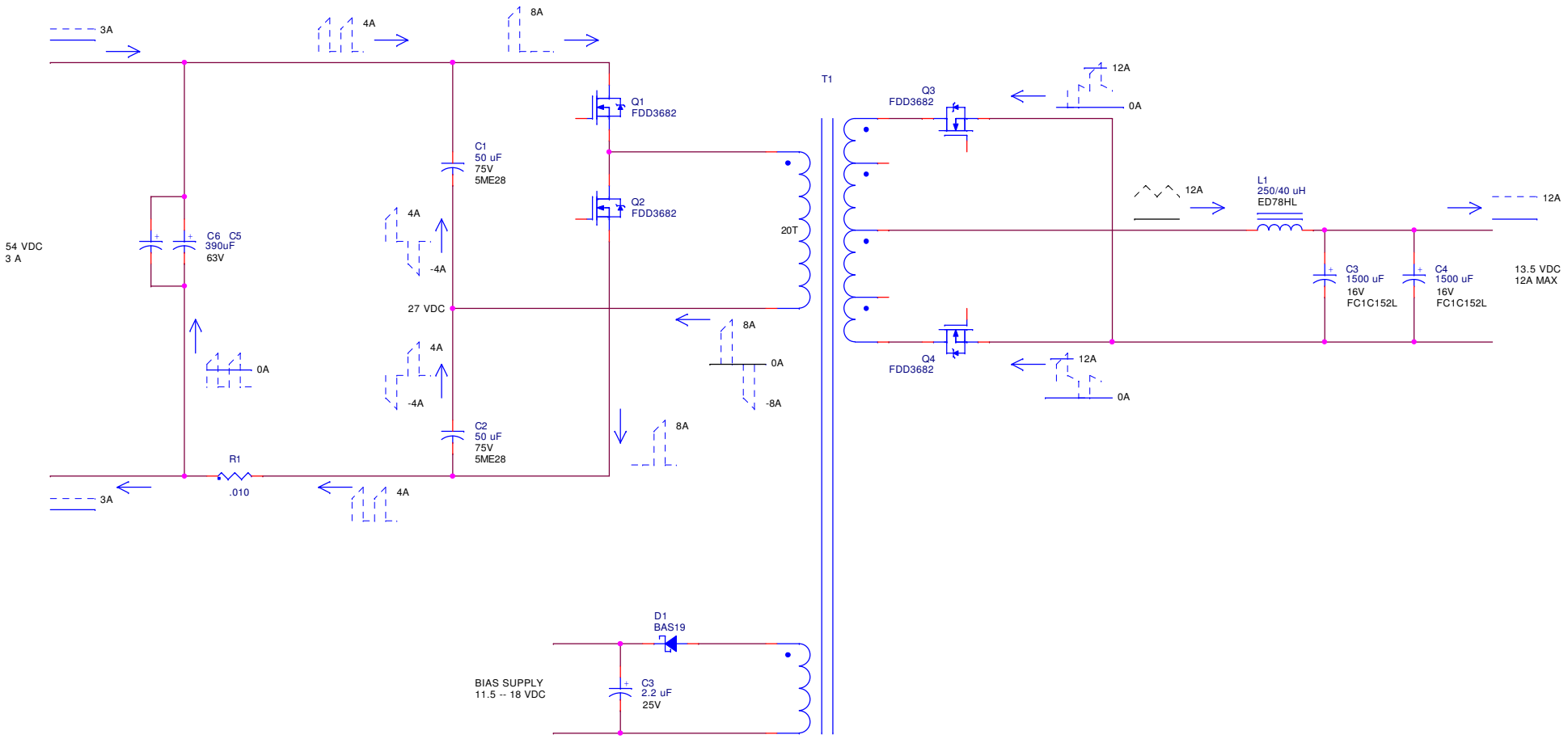

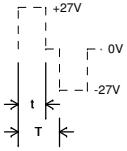

Nominal Primary Voltage Waveform at Vin = 54V
t=14.3uS
T=20uS
Nominal Duty = t/T = 0.714

MBARI
7700 Sandholdt Road
Moss Landing CA 95039
831-775-1700

Concept Schematic, 48-12V Power Stage, MOOS Power System

Ed Mellinger
831-775-1730
meed@mbari.org

Size	CAGE Code	DWG NO	Rev
B		1002119	1

Wednesday, February 18, 2004

Scale

Sheet 1 of 1