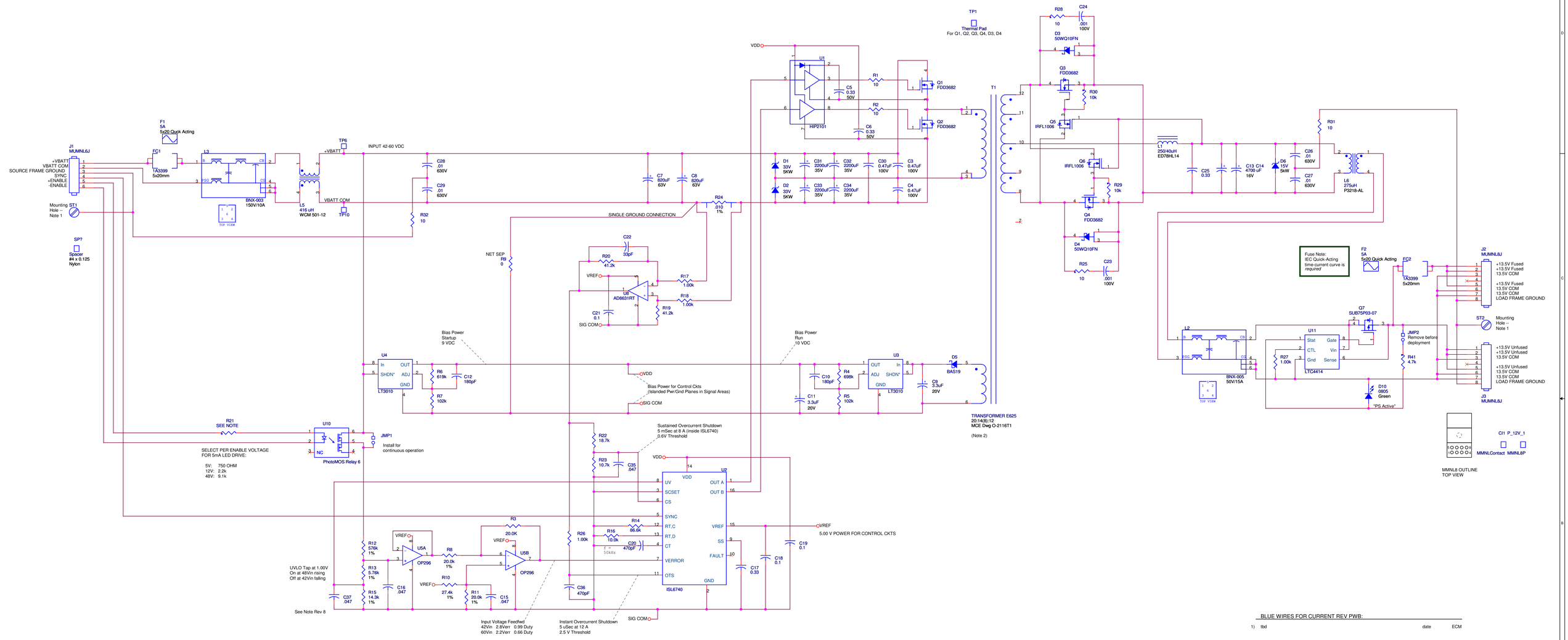

BLUE WIRES FOR CURRENT REV PWB:

1) tbd date ECM

3.0	12 Jan 06	ecm	Add Redundancy features: OR-ing circuit U11, Q7, F2 Replace film caps C1-C2 in half bridge with electrolytic caps C31-C34; change D1-D2 from 43V to 33V Add noise control caps C25, C26, add CM inductors L5, L6
2.1	5 Mar 04	ecm	Change voltage rating C23, C24
Rev 8	4 Mar 04	ecm	As-Built for Rev 0 PWB: Change C7, C8, C13, C14, C23, C24 Change R10, R11, R25, R28 Add C30
Rev 7	3 Jan 04	ecm	Change C26-29 to .01uF 630V 1206
Rev 6	28 Jan 04	ecm	6-pin EMI Block Filters
Rev 5	28 Jan 04	ecm	4-pin fuse clips; ground terminal parts
Rev 4	28 Jan 04	jdr	Added correct footprints to J1, J2, J3, and JMP1.
Rev 3	27 Jan 04	ecm	Re-import layout schematic; change J1 to 6 pins and J2, J3 to 8 pins; add JMP1
Rev 2	7 Nov 03	ecm	Part updates: fuse clip, 2-term'l sense resistor, U5 A+B sections, add R3, values R10,11, Screw Holes
Rev 1	6 Nov 03	ecm	Initial release for Layout and Purchasing

LAST USED REFERENCES

C37
Q8
L6
T2
R41
TP10
U11
D10
J3
F2
ST2
FC2
JMP2
CI1
P_12V_1

Note 1: Connecting BOTH Source Frame Ground AND Load Frame Ground AND both screw terminals will connect Source and Load grounds. Recommend connecting EITHER ground and BOTH screw terminals.

Note 2: Trim all leads on back side of board. Maximum height of leads or other live surfaces above PWB is 1/16".

\\Tornado\Orcad\Projects\MOOSPowerSystem\MOOSPOWERSYSTEM.DSN

Ed Mellinger
831-775-1730
meed@mbari.org

Friday, June 16, 2006

MBARI
7700 Sandholdt Road
Moss Landing CA 95039
831-775-1700

Schematic, 48-12V Converter, MOOS Mooring Power System

Size	CAGE Code	DWG NO	Rev
D	<Cage Code>	1002129	3.0

Scale

Sheet 1 of 3