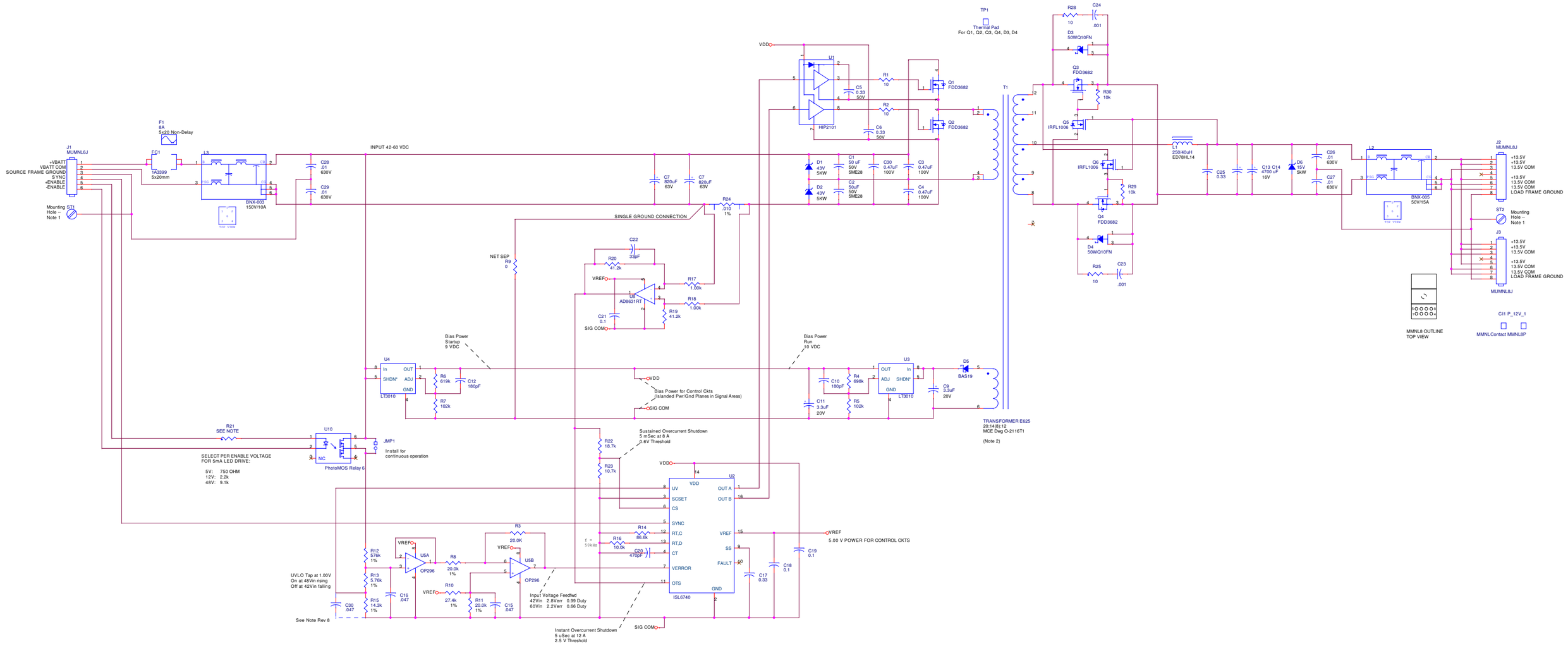

			As-Built for Rev 0 PWB: Change C7, C8, C13, C14, C23, C24 Change R10, R11, R25, R28 Add C30
Rev 8	4 Mar 04	ecm	
Rev 7	3 Jan 04	ecm	Change C26-29 to .01µF 630V 1206
Rev 6	28 Jan 04	ecm	6-pin EMI Block Filters
Rev 5	28 Jan 04	ecm	4-pin fuse clips; ground terminal parts
Rev 4	28 Jan 04	jdr	Added correct footprints to J1, J2, J3, and JMP1.
Rev 3	27 Jan 04	ecm	Re-import layout schematic; change J1 to 6 pins and J2, J3 to 8 pins; add JMP1
Rev 2	7 Nov 03	ecm	Part updates; fuse clip, 2-term'l sense resistor, U5 A+B sections, add R3, values R10,11, Screw Holes
Rev 1	6 Nov 03	ecm	Initial release for Layout and Purchasing

Note 1: Connecting BOTH Source Frame Ground AND Load Frame Ground AND both screw terminals will connect Source and Load grounds. Recommend connecting EITHER ground and BOTH screw terminals.

Note 2: Trim all leads on back side of board. Maximum height of leads or other live surfaces above PWB is 1/16".

\\Tornado\Orcad\Projects\MOOSPowerSystem\MOOSPOWERSYSTEM.DSN

MBARI
7700 Sandholdt Road
Moss Landing CA 95039
831-775-1700

Schematic, 48-12V Converter, MOOS Mooring Power System

Ed Mellinger
831-775-1730
meed@mbari.org

Size	CAGE Code	DWG NO	Rev
D	<Cage Code>	1002129	6

Thursday, March 04, 2004

Scale

Sheet 1 of 1