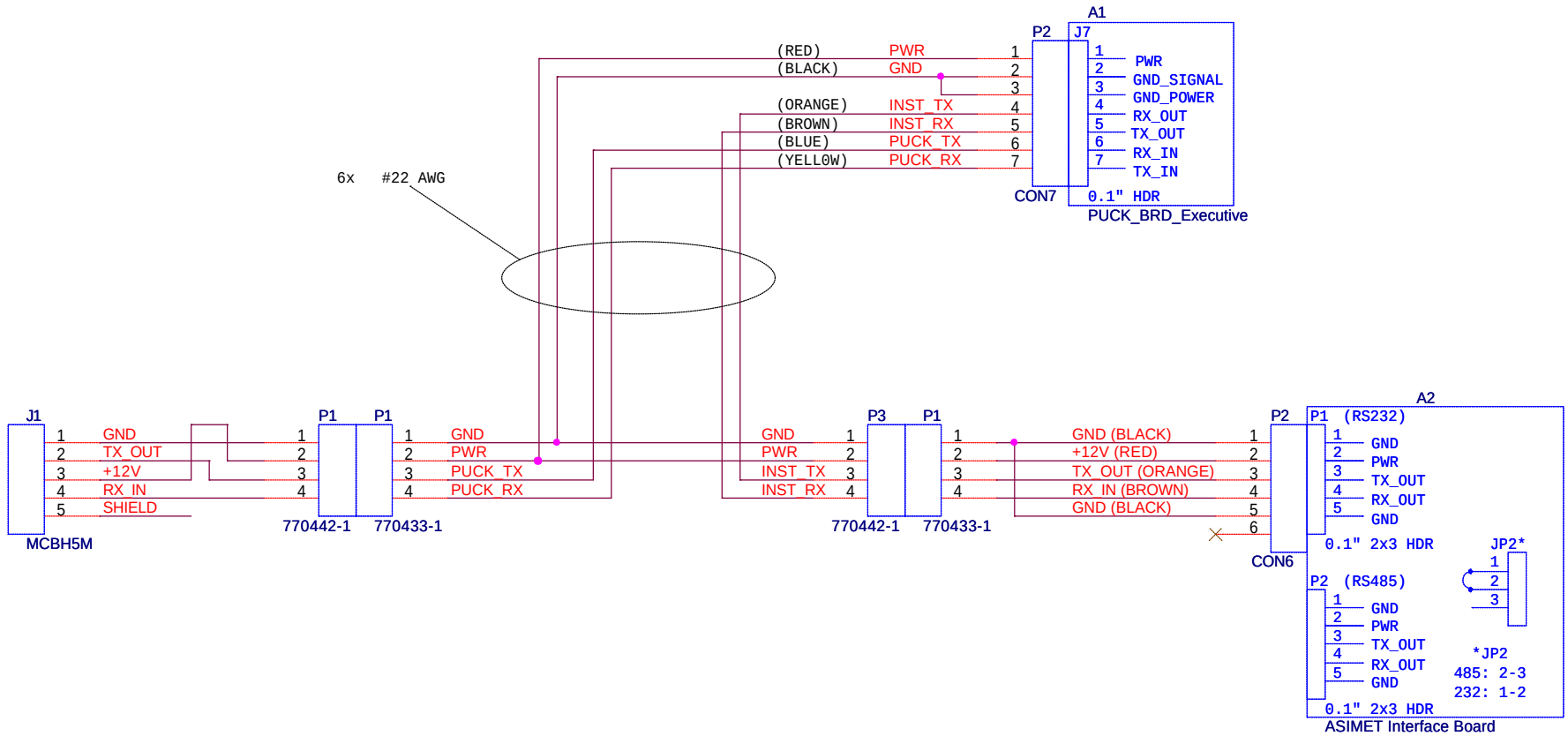

RS485 mode: JP2 is connected to pins 2-3 (closest to connector P2); the power/comms cable connects to P2.
RS232 mode: JP2 is connected to pins 1-2 (closest to connector P1); the power/comms cable connects to P1.

Copyright © 2005 MBARI

All information herin is considered proprietary and may not be copied, duplicated, or transmitted without the express permission of Monterey Bay Aquarium Research Institute.

M B A R I

Designed by: Lance McBride

Drawn by: Lance McBride

Monterey Bay Aquarium Research Institute
7700 Sandholdt Rd., Moss Landing, CA 95039-9644

Title: ASIMET INTERNAL PUCK WIRING

Size	Document Number	Rev
A	1002873	A

Date: Thursday, September 01, 2005 Sheet 1 of 1