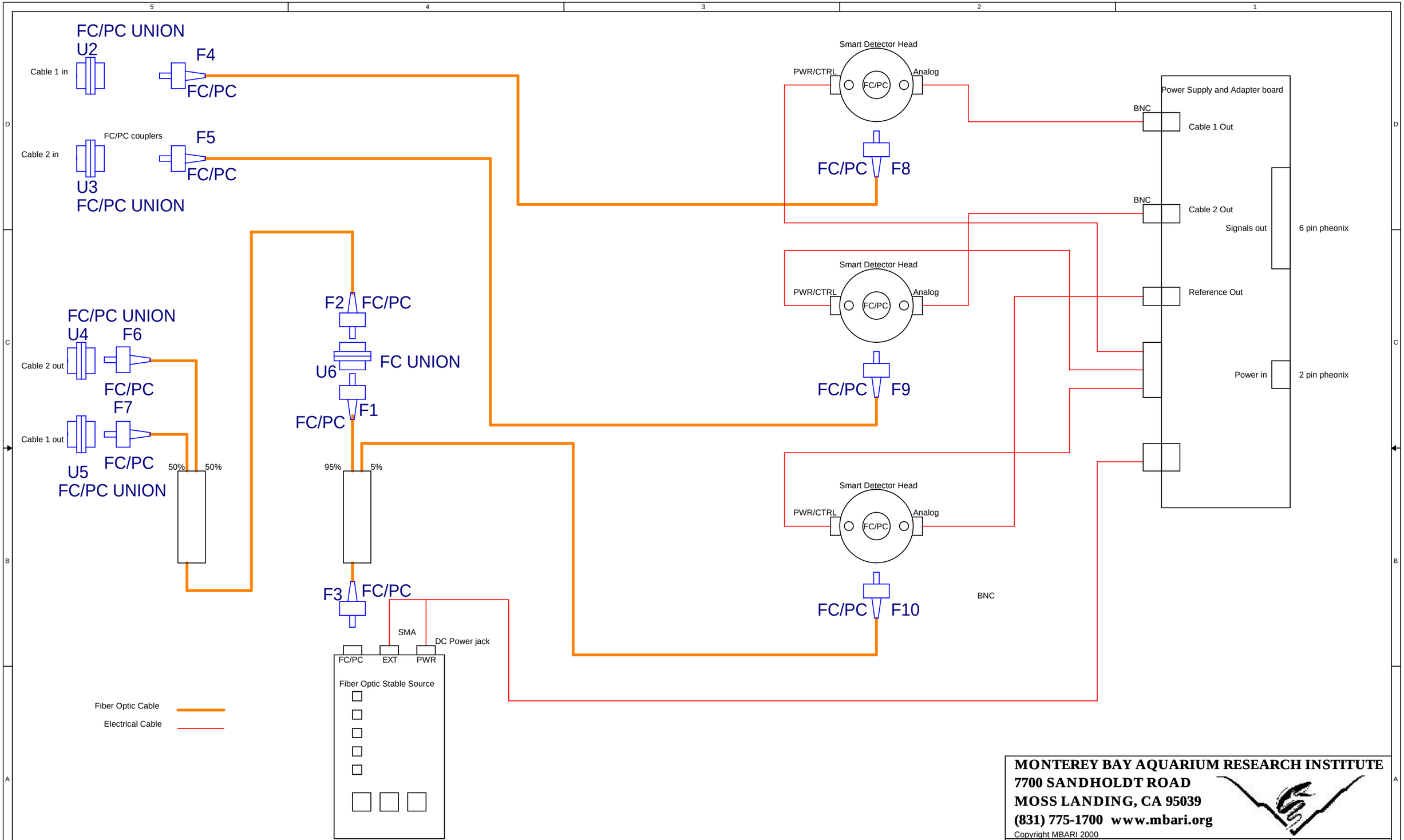

MONTEREY BAY AQUARIUM RESEARCH INSTITUTE
7700 SANDHOLDT ROAD
MOSS LANDING, CA 95039
(831) 775-1700 www.mbari.org

Copyright MBARI 2000

Title **MOOS Fiber Optic Monitoring System**				Number **<Doc>**
Size **B**	Engineer **Scott Jensen**	Layout **Duane Thompson**	Filename **<Filename>**	Rev **2.0**
	Date: Wednesday, September 11, 2002	Sheet 1 of 1		