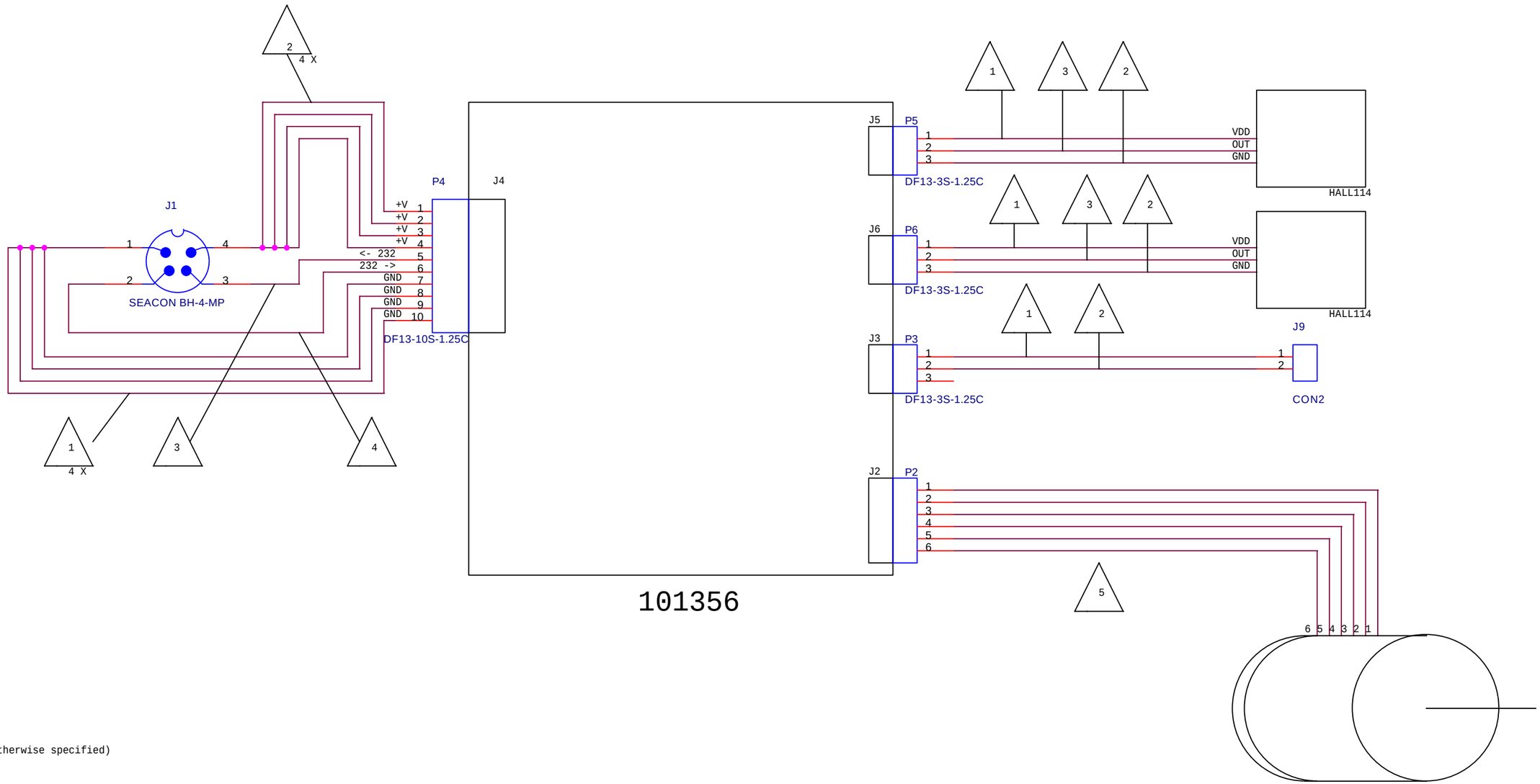

NOTES: (Unless otherwise specified)

1. Wire: Black 30AWG. Cut to fit (APPX: 6.00" overall)

2. Wire: Red 30AWG. Cut to fit (APPX: 6.00" overall)

3. Wire: Yellow 30AWG. Cut to fit (APPX: 6.00" overall)

4. Wire: Blue 30AWG. Cut to fit (APPX: 6.00" overall)

5. Wire assembly included with motor

REF DES.	MFG	MFG P/N
P3, P5, P6	Hirose	DF13-3S-1.25C
P4	Hirose	DF13-10S-1.25C

© 2002 Monterey Bay Aquarium Research Institute

Title: New Anti-biofouling Shutter Wiring Diagram

Size: B | Document Number: 101406 | Rev: B

Date: Thursday, December 12, 2002 | Sheet 1 of 1