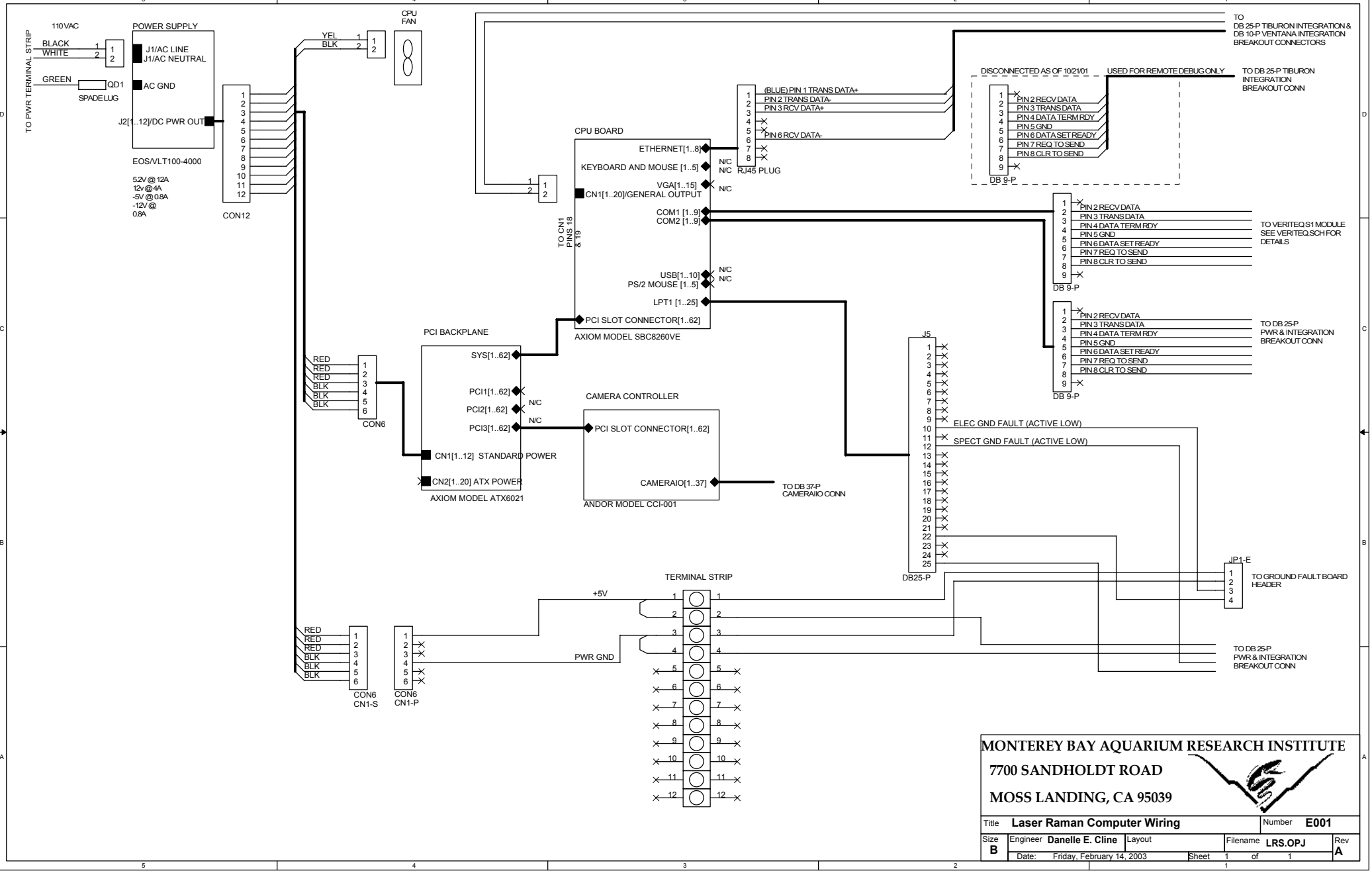

MONTEREY BAY AQUARIUM RESEARCH INSTITUTE
7700 SANDHOLDT ROAD
MOSS LANDING, CA 95039

Title	Laser Raman Computer Wiring	Number	E001
Size B	Engineer Danelle E. Cline	Layout	Filename LRS.OPJ	Rev A
	Date: Friday, February 14, 2003	Sheet 1 of 1	