NOTES:

REVISIONS				
ZONE	REV	DESCRIPTION	DATE	APPROVED
	X	EXPERIMENTAL RELEASE ER 1043-		

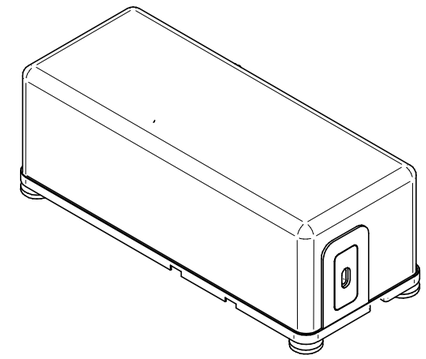

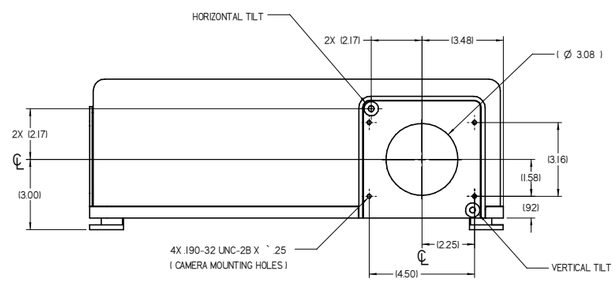

VIEW A-A

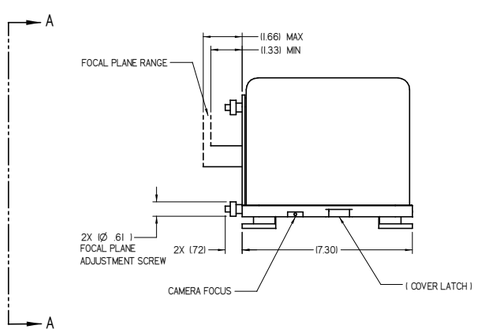

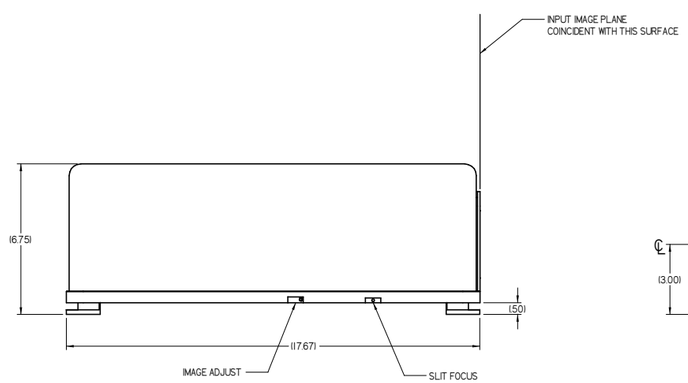

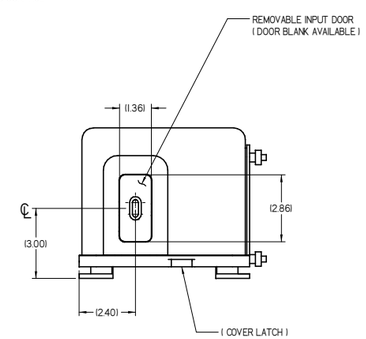

QTY REQD	DESCRIPTION	CAGE CODE	PART OR IDENTIFYING NO.	ITEM

PARTS LIST

PROPRIETARY NOTICE

THIS DOCUMENT CONTAINS PROPRIETARY INFORMATION AND SUCH INFORMATION MAY NOT BE DISCLOSED TO OTHERS FOR ANY PURPOSE OR USED FOR MANUFACTURING PRUPOSES WITHOUT WRITTEN PERMISSION FROM KAISER OPTICAL SYSTEMS, INC.

DASH NO.	NEXT ASSY	USED ON

APPLICATION

UNLESS OTHERWISE SPECIFIED INTERPRET THIS DRAWING PER DOD-STD-100

PARTS TO BE FREE OF BURRS AND SHARP EDGES

SOLDER PER ML-STD-454 REQT 5

COMMERCIAL TOLERANCES APPLY TO STOCK SIZES

WORKMANSHIP PER ML-STD-454, REQT 9

IDENTIFYING NUMBERS SHOWN IN PARENTHESIS FOR REFERENCE ONLY

DIMENSIONAL LIMITS APPLY AFTER FINISH PROCESSING

UNLESS OTHERWISE SPECIFIED DIMENSIONS ARE IN INCHES

TOLERANCES:
.XX ±.02
.XXX ±.005
ANGLES ± 2°

SURFACE TEXTURE: 125

MATERIAL:

FINISH:

CONTRACT NO.			
DWN 8-27-97 M. STICHMM	QA		
CHK	MFG		
MECH	RELBL		
ELEC	PROJ ENG		
OPTICAL	PROJ MGR		
APVD CUSTOMER			

KAISER OPTICAL SYSTEMS, INC.
A KAISER AEROSPACE & ELECTRONICS COMPANY
ANN ARBOR, MICHIGAN 48106

TITLE
OUTLINE DRAWING
f1.8 SPECTROGRAPH

SIZE	FSCM NO.	DWG NO.	REV
E		2004287	X

SCALE 1/1 WT SHEET 1 OF 1

(RAMAN SPECTROGRAPH f1.8)

F-2004287 X