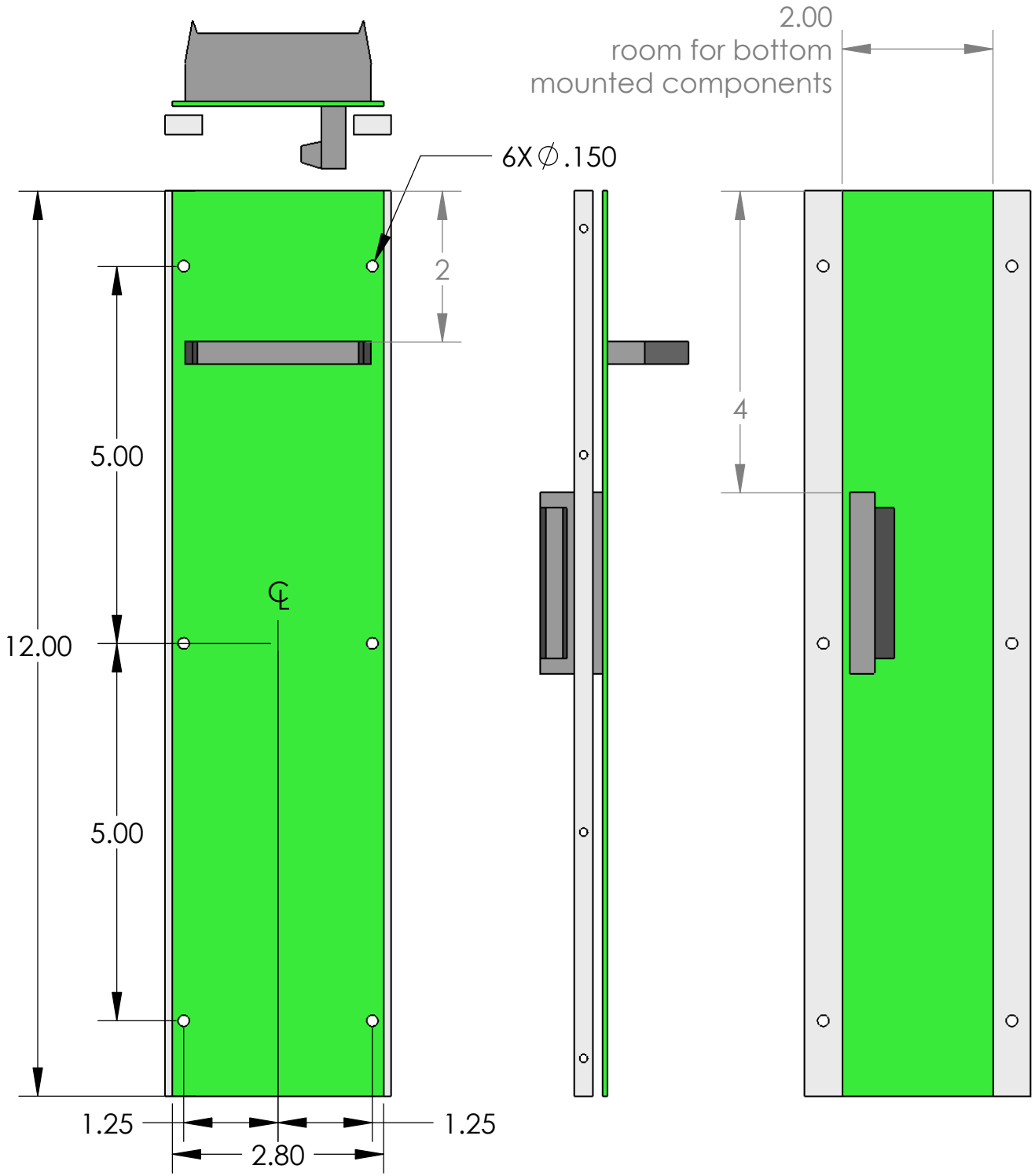

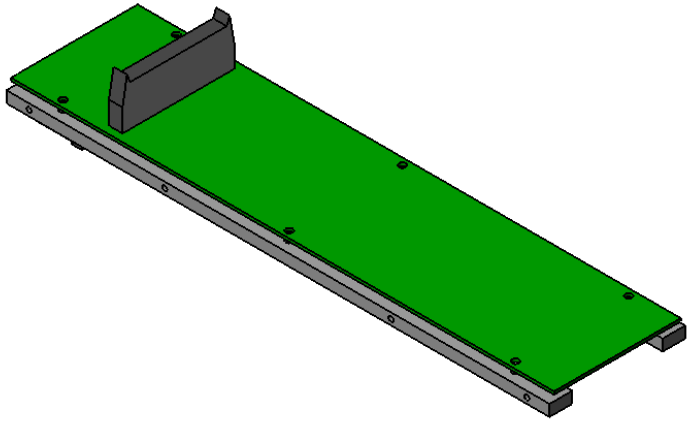

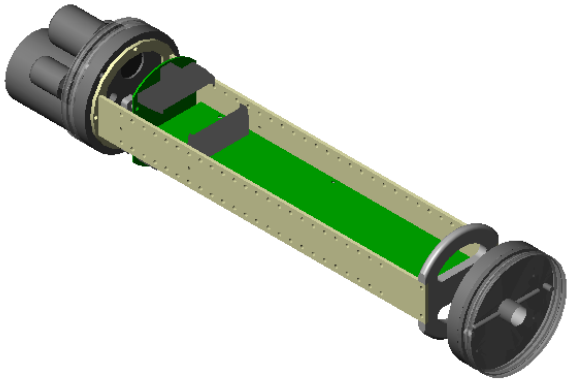

LOBO Controller/Logger PCB
MBARI
Version 1: 4/15/04
Scale 1:2