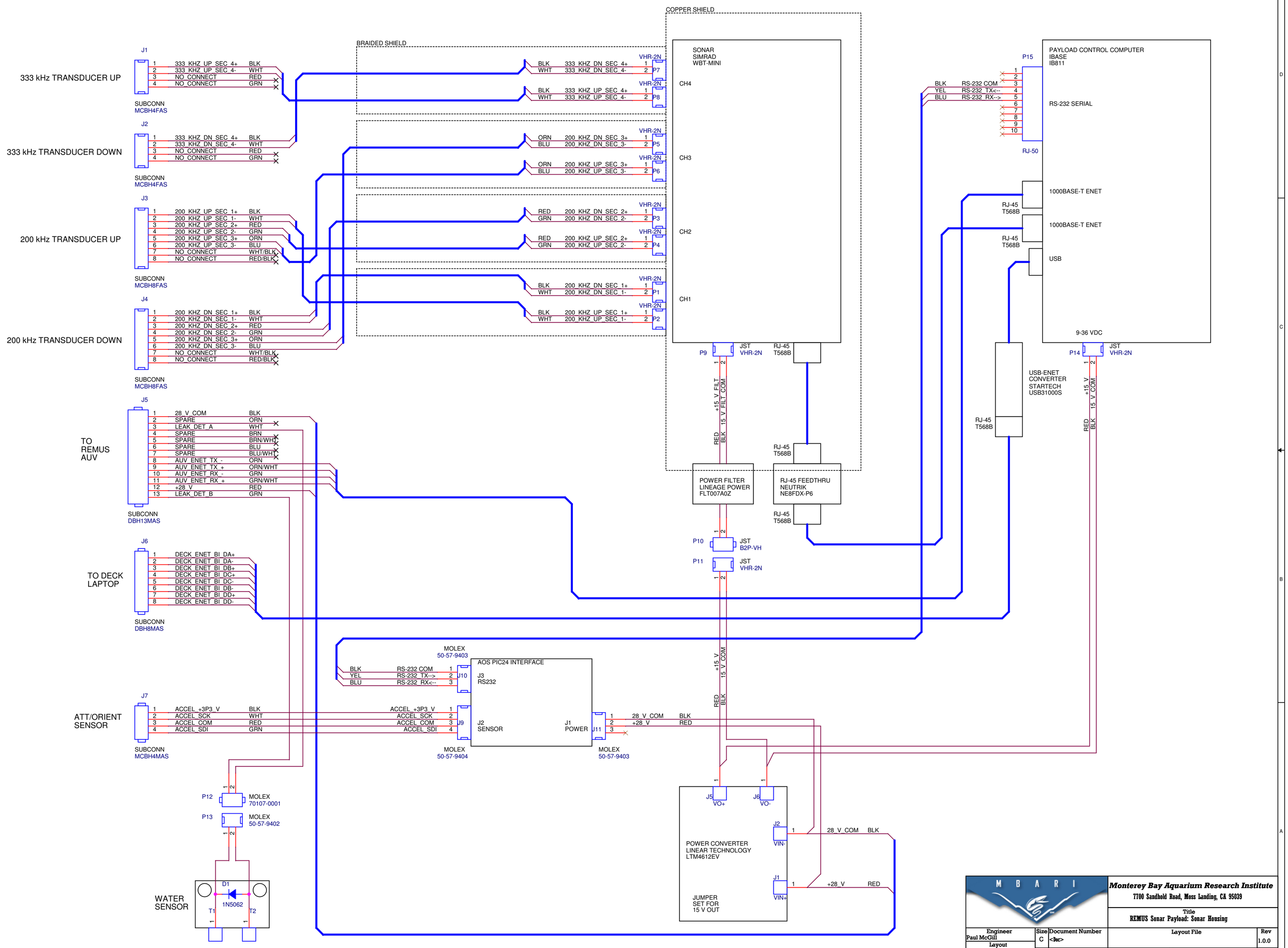

MBARI	Monterey Bay Aquarium Research Institute 7700 Sandhold Road, Moss Landing, CA 95039		
	Title REMUS Sonar Payload: Sonar Housing		
Engineer Paul McGill	Size C	Document Number <Doc>	Layout File	Rev 1.0.0
Layout	Date: Monday, January 03, 2022	Sheet 1 of 1		