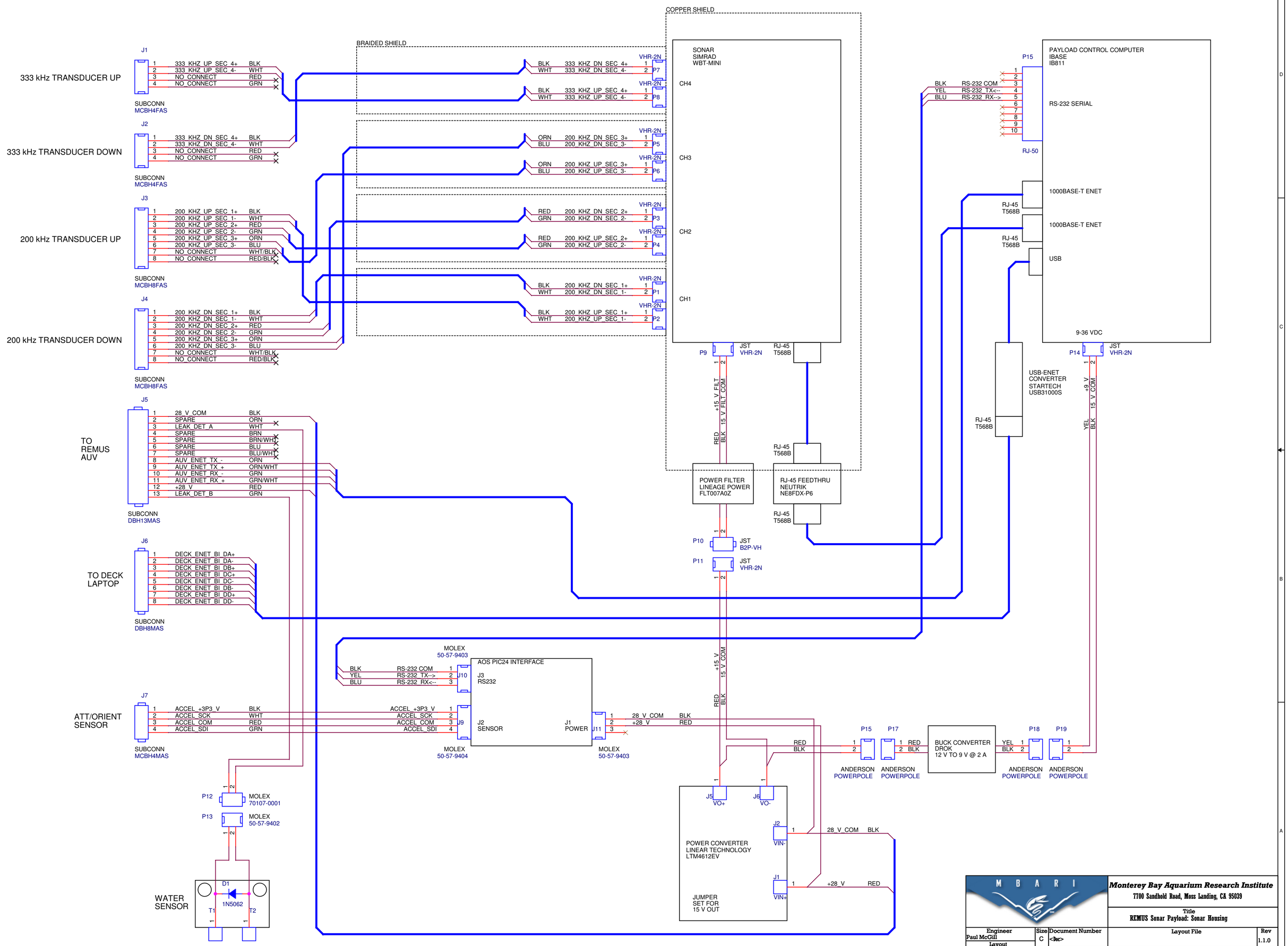
333 kHz TRANSDUCER UP
J1
SUBCONN MCBH4FAS
1 333_KHZ_UP_SEC_4+ BLK
2 333_KHZ_UP_SEC_4- WHT
3 NO_CONNECT RED
4 NO_CONNECT GRN
333 kHz TRANSDUCER DOWN
J2
SUBCONN MCBH4FAS
1 333_KHZ_DN_SEC_4+ BLK
2 333_KHZ_DN_SEC_4- WHT
3 NO_CONNECT RED
4 NO_CONNECT GRN
200 kHz TRANSDUCER UP
J3
SUBCONN MCBH8FAS
1 200_KHZ_UP_SEC_1+ BLK
2 200_KHZ_UP_SEC_1- WHT
3 200_KHZ_UP_SEC_2+ RED
4 200_KHZ_UP_SEC_2- GRN
5 200_KHZ_UP_SEC_3+ ORN
6 200_KHZ_UP_SEC_3- BLU
7 NO_CONNECT WHT/BLK
8 NO_CONNECT RED/BLK
200 kHz TRANSDUCER DOWN
J4
SUBCONN MCBH8FAS
1 200_KHZ_DN_SEC_1+ BLK
2 200_KHZ_DN_SEC_1- WHT
3 200_KHZ_DN_SEC_2+ RED
4 200_KHZ_DN_SEC_2- GRN
5 200_KHZ_DN_SEC_3+ ORN
6 200_KHZ_DN_SEC_3- BLU
7 NO_CONNECT WHT/BLK
8 NO_CONNECT RED/BLK
TO REMUS AUV
J5
SUBCONN DBH13MAS
1 28_V_COM BLK
2 SPARE ORN
3 LEAK_DET_A WHT
4 SPARE BRN
5 SPARE BRN/WHT
6 SPARE BLU
7 SPARE BLU/WHT
8 AUV_ENET_TX - ORN
9 AUV_ENET_TX + ORN/WHT
10 AUV_ENET_RX - GRN
11 AUV_ENET_RX + GRN/WHT
12 +28_V RED
13 LEAK_DET_B GRN
TO DECK LAPTOP
J6
SUBCONN DBH8MAS
1 DECK_ENET_BI_DA+
2 DECK_ENET_BI_DA-
3 DECK_ENET_BI_DB+
4 DECK_ENET_BI_DC+
5 DECK_ENET_BI_DC-
6 DECK_ENET_BI_DB-
7 DECK_ENET_BI_DD+
8 DECK_ENET_BI_DD-
ATT/ORIENT SENSOR
J7
SUBCONN MCBH4MAS
1 ACCEL_+3P3_V BLK
2 ACCEL_SCK WHT
3 ACCEL_COM RED
4 ACCEL_SDI GRN
BRAIDED SHIELD
VHR-2N
BLK 333_KHZ_DN_SEC_4+ 1
WHT 333_KHZ_DN_SEC_4- 2 P7
BLK 333_KHZ_UP_SEC_4+ 1
WHT 333_KHZ_UP_SEC_4- 2 P8
ORN 200_KHZ_DN_SEC_3+ 1
BLU 200_KHZ_DN_SEC_3- 2 P5
ORN 200_KHZ_UP_SEC_3+ 1
BLU 200_KHZ_UP_SEC_3- 2 P6
RED 200_KHZ_DN_SEC_2+ 1
GRN 200_KHZ_DN_SEC_2- 2 P3
RED 200_KHZ_UP_SEC_2+ 1
GRN 200_KHZ_UP_SEC_2- 2 P4
BLK 200_KHZ_DN_SEC_1+ 1
WHT 200_KHZ_DN_SEC_1- 2 P1
BLK 200_KHZ_UP_SEC_1+ 1
WHT 200_KHZ_UP_SEC_1- 2 P2
COPPER SHIELD
SONAR SIMRAD WBT-MINI
CH4
CH3
CH2
CH1
P9
JST VHR-2N
RJ-45 T568B
+15_V_FILT
15_V_FILT_COM
RED
BLK
POWER FILTER LINEAGE POWER FLT007A0Z
RJ-45 FEEDTHRU NEUTRIK NE8FDX-P6
P10
JST B2P-VH
P11
JST VHR-2N
PAYLOAD CONTROL COMPUTER IBASE IB811
P15
RJ-50
BLK RS-232 COM
YEL RS-232_TX<--
BLU RS-232_RX-->
RS-232 SERIAL
1000BASE-T ENET
1000BASE-T ENET
USB
9-36 VDC
P14
JST VHR-2N
+9_V
15_V_COM
YEL
BLK
USB-ENET CONVERTER STARTECH USB31000S
MOLEX 50-57-9403
AOS PIC24 INTERFACE
J3 RS232
J10
BLK RS-232 COM
YEL RS-232_TX-->
BLU RS-232_RX<--
J2 SENSOR
J9
ACCEL_+3P3_V
ACCEL_SCK
ACCEL_COM
ACCEL_SDI
J1 POWER
J11
28_V_COM BLK
+28_V RED
MOLEX 50-57-9404
MOLEX 50-57-9403
+15_V
15_V_COM
RED
BLK
P15 P17
ANDERSON POWERPOLE
BUCK CONVERTER DROK 12 V TO 9 V @ 2 A
P18 P19
ANDERSON POWERPOLE
P12
MOLEX 70107-0001
P13
MOLEX 50-57-9402
WATER SENSOR
D1
1N5062
T1
T2
J5 VO+
J6 VO-
POWER CONVERTER LINEAR TECHNOLOGY LTM4612EV
J2 VIN-
J1 VIN+
28_V_COM BLK
+28_V RED
JUMPER SET FOR 15 V OUT
M B A R I
Monterey Bay Aquarium Research Institute
7700 Sandhold Road, Moss Landing, CA 95039
Title
REMUS Sonar Payload: Sonar Housing
Engineer
Paul McGill
Layout
Size C
Document Number <Doc>
Layout File
Rev 1.1.0
Date: Monday, January 03, 2022
Sheet 1 of 1