THE INFORMATION CONTAINED IN THIS DRAWING IS THE SOLE PROPERTY OF MBARI ANY REPRODUCTION IN PART OR WHOLE WITHOUT THE WRITTEN PERMISSION OF MBARI IS PROHIBITED.

REVISIONS

REV.	DESCRIPTION	DATE	APPROVED
	INITIAL RELEASE		
A	For manufacture	7/7/09	hwj

SECTION A-A
SCALE 1 : 18

Standard OsmoSampler with one pump and four coils

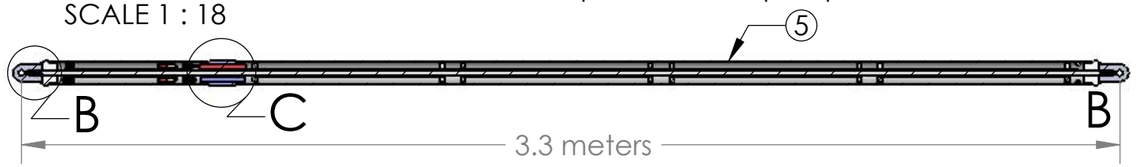

SECTION A-A
SCALE 1 : 18

Acid-Addition OsmoSampler with two pumps and six coils

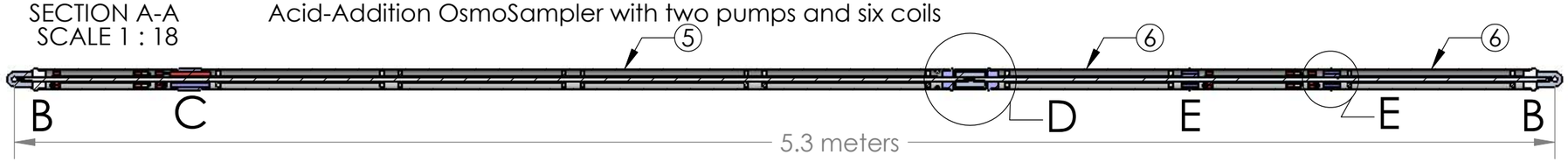

SECTION A-A
SCALE 1 : 18

Microbiological OsmoSampler with one pump and eight coils

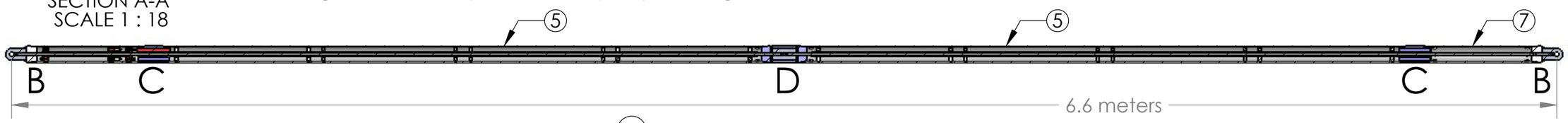

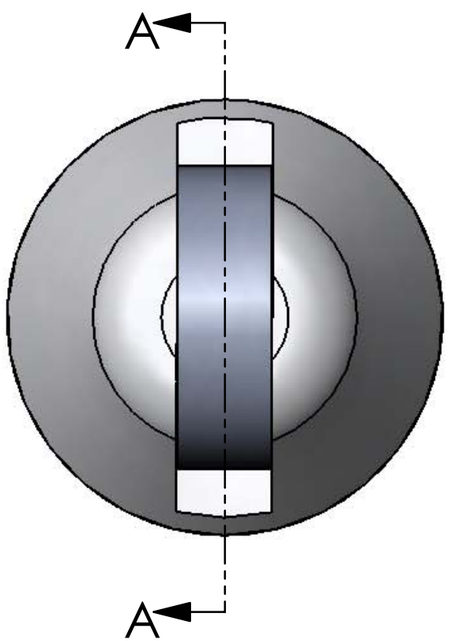

DETAIL B
SCALE 1 : 4

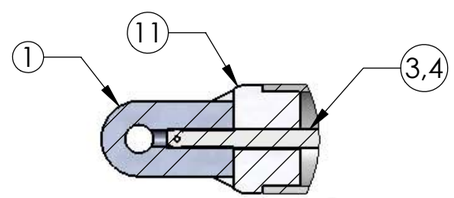

DETAIL C
SCALE 1 : 4

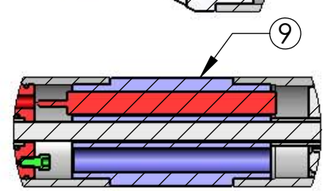

DETAIL D
SCALE 1 : 4

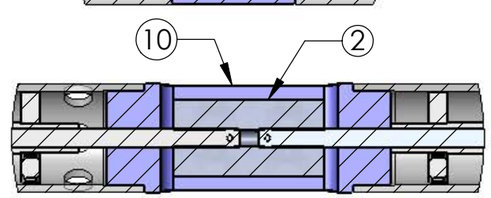

DETAIL E
SCALE 1 : 4

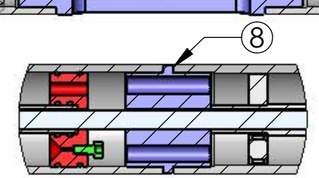

Item No.	Qty	Part No.	Description	Material Specification
12	4		Shackle sleeve	1-1/2" Delrin Rod
11	2		Endcap	3" PVC Rod
10	0 or 1		Union Coupler	3" PVC Rod
9	1 or 2		Temp Logger Coupler	3" PVC Rod
8	0 or 2		Coupler	3" PVC Rod
7	0 or 1		MBIO housing	2-1/2" Clear Sch-40 PVC pipe
6	0 or 2		One coil housing	2-1/2" Clear Sch-40 PVC pipe
5	1 or 2		Four coil housing	2-1/2" Clear Sch-40 PVC pipe
4	0 or 1		Strength member (long)	1/2" 316 Stainless Steel rod
3	1 or 2		Strength member (short)	1/2" 316 Stainless Steel rod
2	0 or 1		Union Plate	5/8" 316 Stainless Steel plate
1	2		Shackle Plate	5/8" 316 Stainless Steel plate

Bill of Materials

Shop / Q.C.
Inspector
Shop Foreman
Engineer
NEXT ASSY Description | NEXT ASSY Number
Application

UNLESS OTHERWISE SPECIFIED TOLERANCES ARE:
1 PLACE DIM ±1/16 | 2 PLACE DIM ±.02 | 3 PLACE DIM ±.005 | ANGLES ±1°

1. DIMENSIONS ARE IN INCHES
2. DIMENSION LIMITS HELD AFTER PLATING.
3. REMOVE BURRS AND SHARP EDGES .015 MAX.
4. MACHINED FILLET RADII .0150-.030.
5. MACHINED DIAMETERS ON A COMMON CENTERLINE CONCENTRIC WITHIN .OO5
6. PERPENDICULARITY & PARALLELISM OF MACHINED SURFACES .002 PER INCH. MAX .012 INCHES FOR SINGLE SURFACE.

DO NOT SCALE DRAWING

APPROVALS	DATE
DRAWN Hans Jannasch	06/12/09
ENGINEER	
CHECKED	
PROJECT NO.	
PROJECT NSF OsmoSamplers	
WEIGHT	

Monterey Bay Aquarium Research Institute
MBARI
7700 Sandholdt RD.
Moss Landing, CA 95039
PH: (831) 775-1700

PVC OsmoSampler Housings
(for Juan de Fuca 2009)

SIZE B | DWG. NO. 233jaha-pvcOS-JdF-2009 | REV. A
SCALE 1:3 | CAD FILE: Tornado/chem/SWfiles | SHEET 1 OF 5

THE INFORMATION CONTAINED IN THIS DRAWING IS THE SOLE PROPERTY OF MBARI ANY REPRODUCTION IN PART OR WHOLE WITHOUT THE WRITTEN PERMISSION OF MBARI IS PROHIBITED.

REVISIONS			
REV.	DESCRIPTION	DATE	APPROVED
	INITIAL RELEASE		
A	For manufacture	7/7/09	hwj

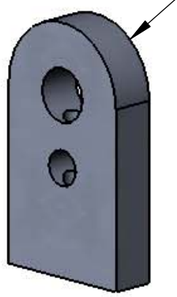

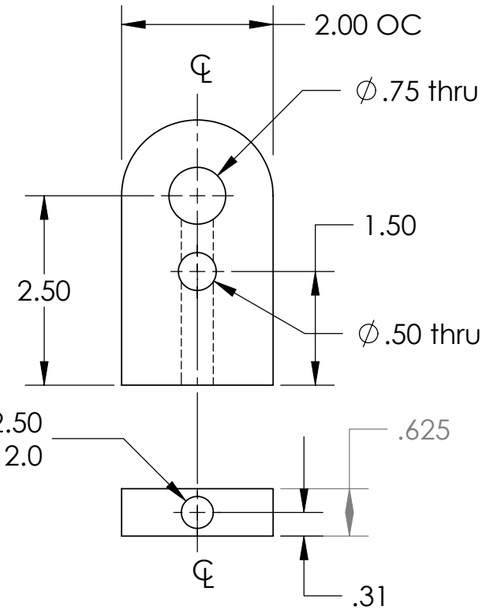

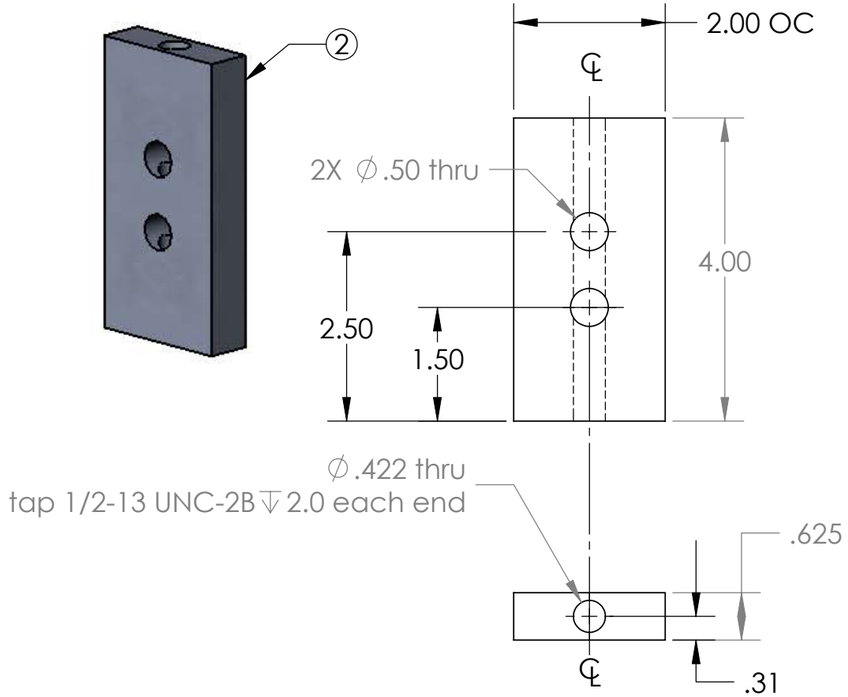

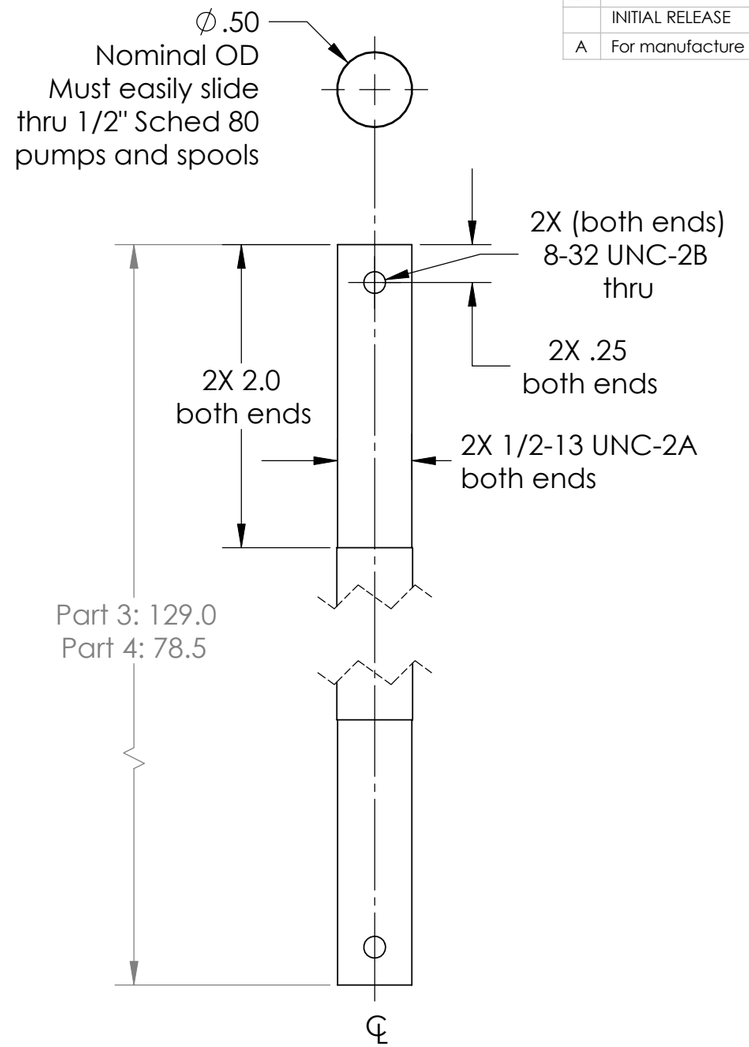

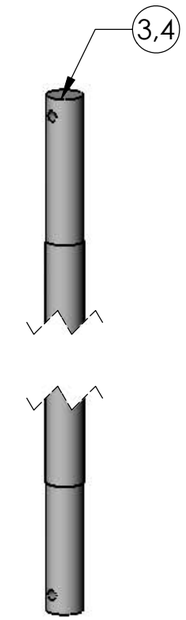

Item No.	Qty	Part No.	Description	Material Specification
4	0 or 1		Strength member (long)	1/2" 316 Stainless Steel rod
3	1 or 2		Strength member (short)	1/2" 316 Stainless Steel rod
2	0 or 1		Union Plate	5/8" 316 Stainless Steel plate
1	2		Shackle Plate	5/8" 316 Stainless Steel plate

Bill of Materials

Shop / Q.C.	
Inspector	
Shop Foreman	
Engineer	
NEXT ASSY Description	NEXT ASSY Number
Application	

UNLESS OTHERWISE SPECIFIED TOLERANCES ARE:

1 PLACE DIM ±1/16	2 PLACE DIM ±.02	3 PLACE DIM ±.005	ANGLES ±1°

1. DIMENSIONS ARE IN INCHES
2. DIMENSION LIMITS HELD AFTER PLATING.
3. REMOVE BURRS AND SHARP EDGES .015 MAX.
4. MACHINED FILLET RADII .0150-.030.
5. MACHINED DIAMETERS ON A COMMON CENTERLINE CONCENTRIC WITHIN .005
6. PERPENDICULARITY & PARALLELISM OF MACHINED SURFACES .002 PER INCH. MAX .012 INCHES FOR SINGLE SURFACE.

DO NOT SCALE DRAWING

APPROVALS	DATE
DRAWN Hans Jannasch	06/12/09
ENGINEER	
CHECKED	
PROJECT NO.	
PROJECT NSF OsmoSamplers	
WEIGHT	

Monterey Bay Aquarium Research Institute
MBARI
7700 Sandholdt RD.
Moss Landing, CA 95039
PH: (831) 775-1700

PVC OsmoSampler Housings
(for Juan de Fuca 2009)

SIZE B | DWG. NO. 233jaha-pvcOS-JdF-2009 | REV. A

SCALE 1:3 | CAD FILE: Tornado/chem/SWfiles | SHEET 2 OF 5

THE INFORMATION CONTAINED IN THIS DRAWING IS THE SOLE PROPERTY OF MBARI ANY REPRODUCTION IN PART OR WHOLE WITHOUT THE WRITTEN PERMISSION OF MBARI IS PROHIBITED.

REVISIONS			
REV.	DESCRIPTION	DATE	APPROVED
	INITIAL RELEASE		
A	For manufacture	7/7/09	hwj

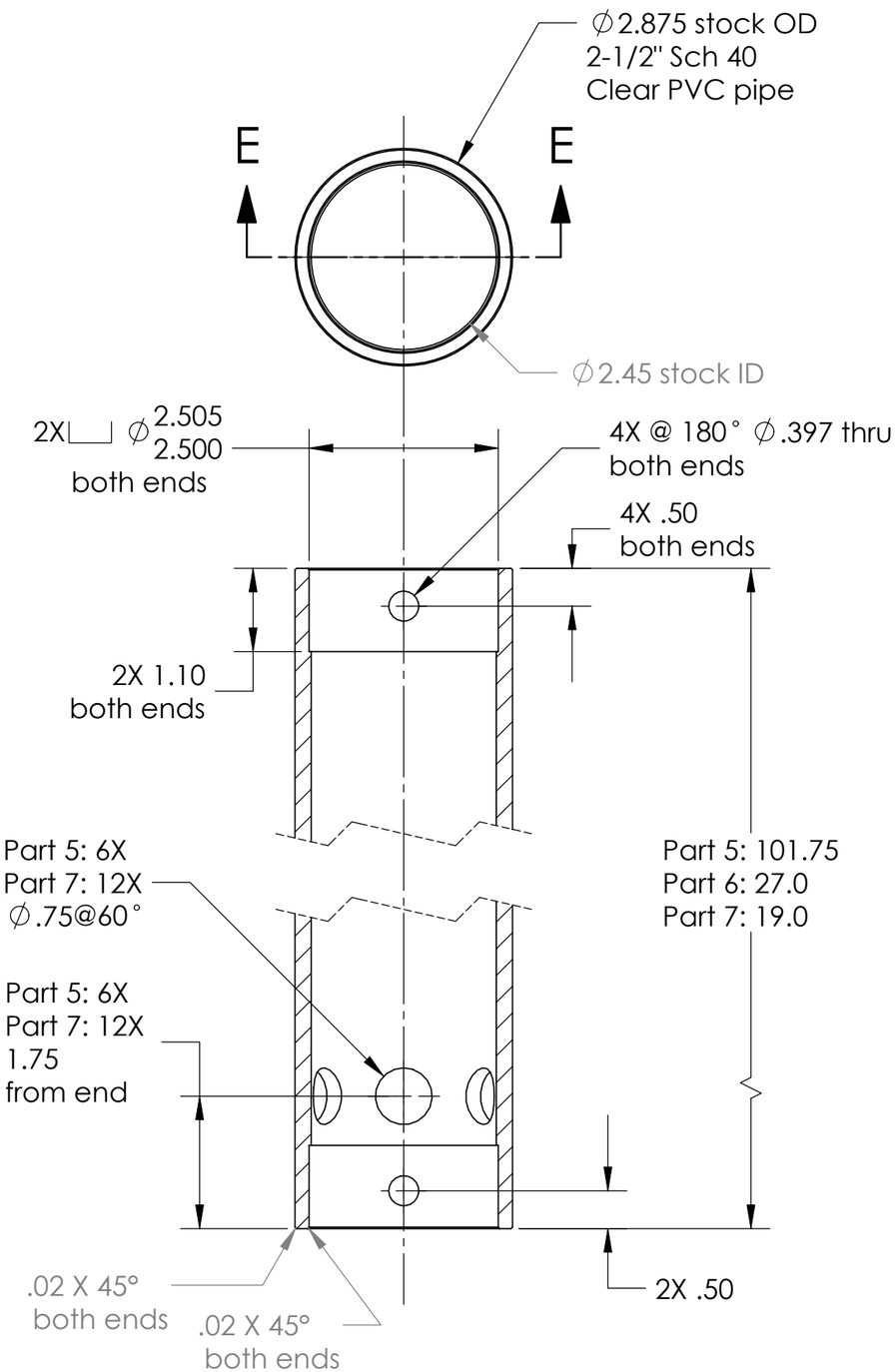

SECTION E-E
SCALE 1 : 2

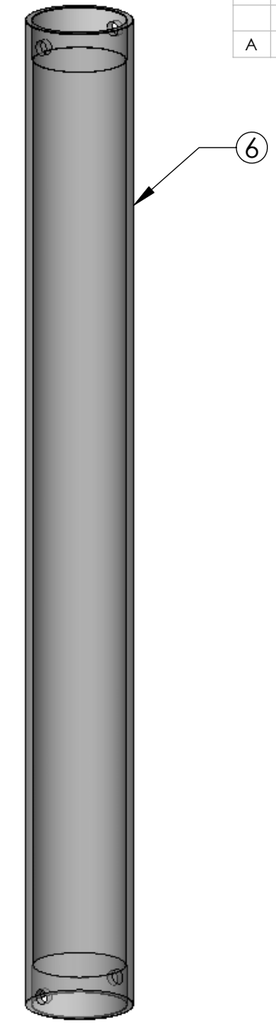

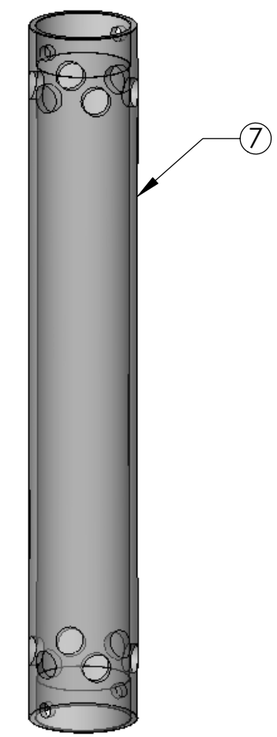

Item No.	Qty	Part No.	Description	Material Specification
7	0 or 1		MBIO housing	2-1/2" Clear Sch-40 PVC pipe
6	0 or 2		One coil housing	2-1/2" Clear Sch-40 PVC pipe
5	1 or 2		Four coil housing	2-1/2" Clear Sch-40 PVC pipe

Bill of Materials

Shop / Q.C.
Inspector
Shop Foreman
Engineer
NEXT ASSY Description | NEXT ASSY Number
Application

UNLESS OTHERWISE SPECIFIED TOLERANCES ARE:
1 PLACE DIM ±1/16 | 2 PLACE DIM ±.02 | 3 PLACE DIM ±.005 | ANGLES ±1°

1. DIMENSIONS ARE IN INCHES
2. DIMENSION LIMITS HELD AFTER PLATING.
3. REMOVE BURRS AND SHARP EDGES .015 MAX.
4. MACHINED FILLET RADII .0150-.030.
5. MACHINED DIAMETERS ON A COMMON CENTERLINE CONCENTRIC WITHIN .005
6. PERPENDICULARITY & PARALLELISM OF MACHINED SURFACES .002 PER INCH. MAX .012 INCHES FOR SINGLE SURFACE.

DO NOT SCALE DRAWING

APPROVALS	DATE
DRAWN Hans Jannasch	06/12/09
ENGINEER	
CHECKED	
PROJECT NO.	
PROJECT NSF OsmoSamplers	
WEIGHT	

Monterey Bay Aquarium Research Institute
MBARI
7700 Sandholdt RD.
Moss Landing, CA 95039
PH: (831) 775-1700

PVC OsmoSampler Housings
(for Juan de Fuca 2009)

SIZE B | DWG. NO. 233jaha-pvcOS-JdF-2009 | REV. A
SCALE 1:3 | CAD FILE: Tornado/chem/SWfiles | SHEET 3 OF 5

THE INFORMATION CONTAINED IN THIS DRAWING IS THE SOLE PROPERTY OF MBARI ANY REPRODUCTION IN PART OR WHOLE WITHOUT THE WRITTEN PERMISSION OF MBARI IS PROHIBITED.

REVISIONS

REV.	DESCRIPTION	DATE	APPROVED
	INITIAL RELEASE		
A	For manufacture	7/7/09	hwj

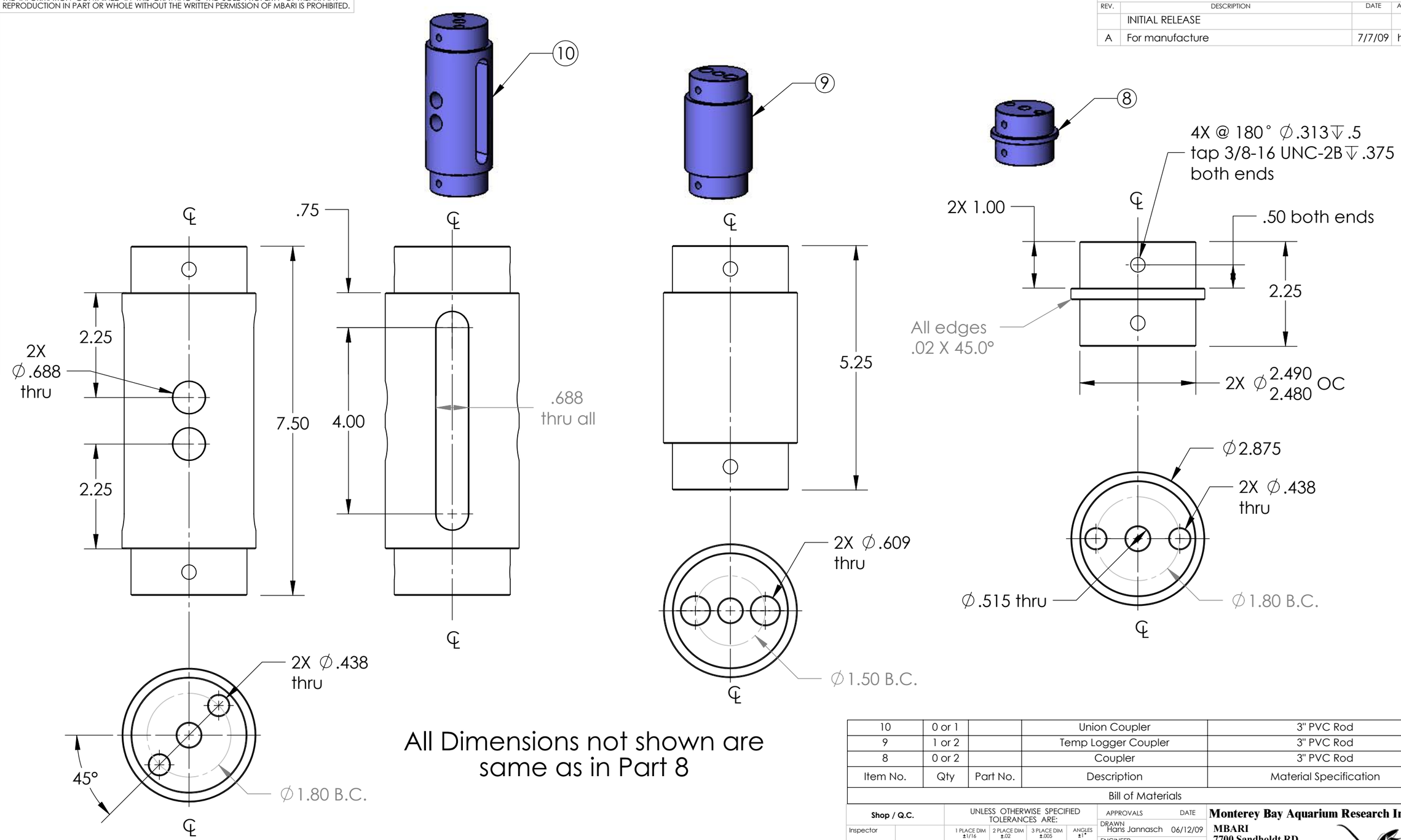

All Dimensions not shown are same as in Part 8

Item No.	Qty	Part No.	Description	Material Specification
10	0 or 1		Union Coupler	3" PVC Rod
9	1 or 2		Temp Logger Coupler	3" PVC Rod
8	0 or 2		Coupler	3" PVC Rod

Bill of Materials

Shop / Q.C.: Inspector; Shop Foreman; Engineer; NEXT ASSY Description; NEXT ASSY Number; Application

UNLESS OTHERWISE SPECIFIED TOLERANCES ARE:

1 PLACE DIM ±1/16	2 PLACE DIM ±.02	3 PLACE DIM ±.005	ANGLES ±1°

1. DIMENSIONS ARE IN INCHES
2. DIMENSION LIMITS HELD AFTER PLATING.
3. REMOVE BURRS AND SHARP EDGES .015 MAX.
4. MACHINED FILLET RADII .0150-.030.
5. MACHINED DIAMETERS ON A COMMON CENTERLINE CONCENTRIC WITHIN .005
6. PERPENDICULARITY & PARALLELISM OF MACHINED SURFACES .002 PER INCH, MAX .012 INCHES FOR SINGLE SURFACE.

DO NOT SCALE DRAWING

APPROVALS DATE
DRAWN Hans Jannasch 06/12/09
ENGINEER
CHECKED
PROJECT NO.
PROJECT NSF OsmoSamplers
WEIGHT

Monterey Bay Aquarium Research Institute
MBARI
7700 Sandholdt RD.
Moss Landing, CA 95039
PH: (831) 775-1700

PVC OsmoSampler Housings
(for Juan de Fuca 2009)

SIZE B | DWG. NO. 233jaha-pvcOS-JdF-2009 | REV. A
SCALE 1:3 | CAD FILE: Tornado/chem/SWfiles | SHEET 4 OF 5

THE INFORMATION CONTAINED IN THIS DRAWING IS THE SOLE PROPERTY OF MBARI ANY REPRODUCTION IN PART OR WHOLE WITHOUT THE WRITTEN PERMISSION OF MBARI IS PROHIBITED.

REVISIONS

REV.	DESCRIPTION	DATE	APPROVED
	INITIAL RELEASE		
A	For manufacture	7/7/09	hwj

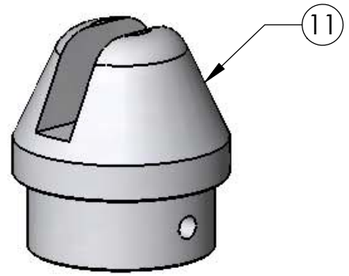

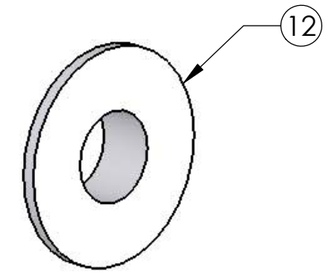

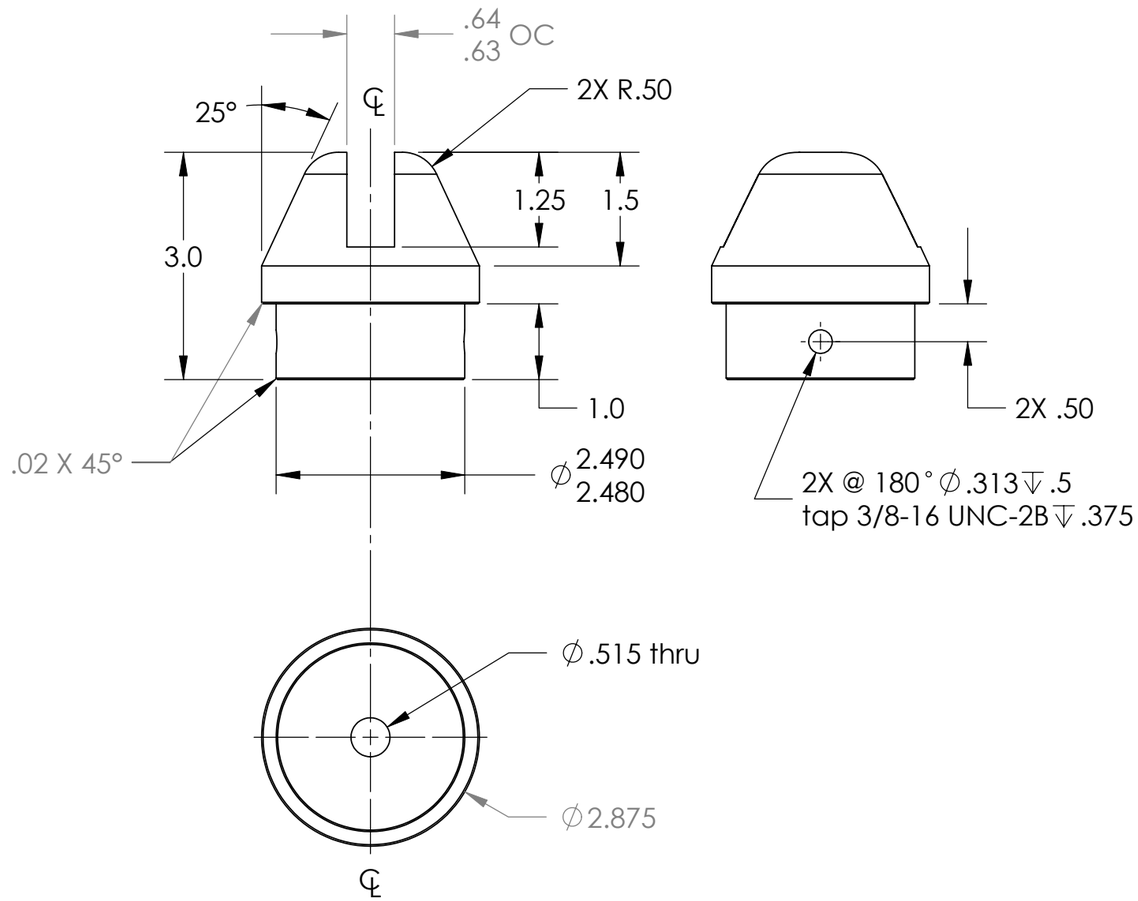

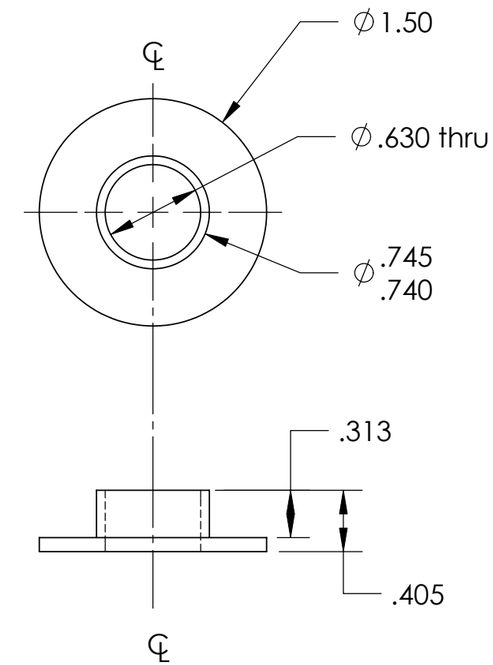

Item No.	Qty	Part No.	Description	Material Specification
12	4		Shackle sleeve	1-1/2" Delrin Rod
11	2		Endcap	3" PVC Rod

Bill of Materials

Shop / Q.C.	
Inspector	
Shop Foreman	
Engineer	
NEXT ASSY Description	NEXT ASSY Number
Application	

UNLESS OTHERWISE SPECIFIED TOLERANCES ARE:

1 PLACE DIM	2 PLACE DIM	3 PLACE DIM	ANGLES
±1/16	±.02	±.005	±1°

1. DIMENSIONS ARE IN INCHES
2. DIMENSION LIMITS HELD AFTER PLATING.
3. REMOVE BURRS AND SHARP EDGES .015 MAX.
4. MACHINED FILLET RADII .0150-.030.
5. MACHINED DIAMETERS ON A COMMON CENTERLINE CONCENTRIC WITHIN .005
6. PERPENDICULARITY & PARALLELISM OF MACHINED SURFACES .002 PER INCH. MAX .012 INCHES FOR SINGLE SURFACE.

DO NOT SCALE DRAWING

APPROVALS	DATE
DRAWN Hans Jannasch	06/12/09
ENGINEER	
CHECKED	
PROJECT NO.	
PROJECT NSF OsmoSamplers	
WEIGHT	

Monterey Bay Aquarium Research Institute
MBARI
7700 Sandholdt RD.
Moss Landing, CA 95039
PH: (831) 775-1700

PVC OsmoSampler Housings
(for Juan de Fuca 2009)

SIZE B | DWG. NO. 233jaha-pvcOS-JdF-2009 | REV. A

SCALE 1:3 | CAD FILE: Tornado/chem/SWfiles | SHEET 5 OF 5