UNFUSED BATTERY OUTPUT!!!
Use fusible links between the batteries,
and/or 1 fuse on the output of the pack!

Layout notes:
1. Traces current requirements 50mA MIN unless specified.
2. Copper area for regulator LT3010 50 sq. mm MIN @ 2 OZ copper
3. Galvanically insulated section

TBD:
1. dip switch for shutdown pin?
2. Surface mount load resistors? 3W, 5W?

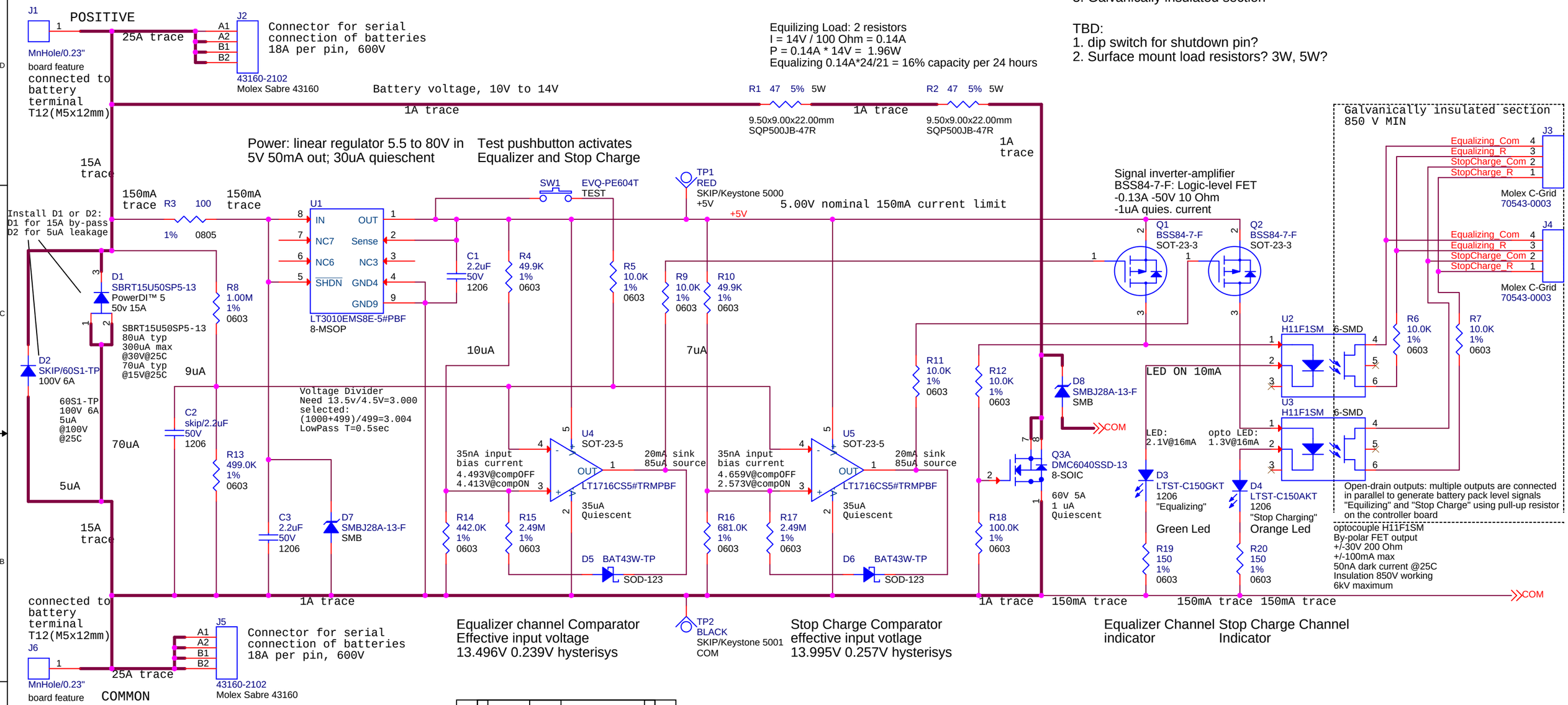


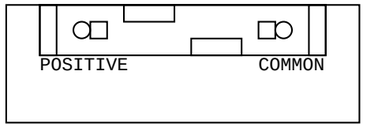


Battery Status Board is mounted across battery terminals:
Power Sonic PDC-12200, 12V 21AH, T12 terminal (12 mm x M5)

Power Sonic Lead-Acid batteries
Temperature compensation at cyclic use:
-At 50C, CV charge at 2.30+/-0.05V/cell or 13.80 +/- 0.3V
-At 40C, CV charge at 2.36+/-0.05V/cell or 14.16 +/- 0.3V
-At 30C, CV charge at 2.42+/-0.05V/cell or 14.52 +/- 0.3V
-At 25C, CV charge at 2.45+/-0.05V/cell or 14.7 +/- 0.3V
-At 20C, CV charge at 2.48+/-0.05V/cell or 14.88 +/- 0.3V
-At 10C, CV charge at 2.54+/-0.05V/cell or 15.24 +/- 0.3V
-At 0C, CV charge at 2.60+/-0.05V/cell or 15.6 +/- 0.3V
Batteries specifications
http://www.power-sonic.com/images/powersonic/technical/1277751263_20100627-TechManual-Lo.pdf

Temperature compensation for float:
-At 50C, float at 2.225+/-0.025V/cell or 13.35 +/- 0.15V
-At 40C, float at 2.245+/-0.025V/cell or 13.47 +/- 0.15V
-At 30C, float at 2.265+/-0.025V/cell or 13.59 +/- 0.15V
-At 25C, float at 2.275+/-0.025V/cell or 13.65 +/- 0.15V
-At 20C, float at 2.285+/-0.025V/cell or 13.71 +/- 0.15V
-At 10C, float at 2.305+/-0.025V/cell or 13.83 +/- 0.15V
-At 0C, float at 2.325+/-0.025V/cell or 13.95 +/- 0.15V

Blockign diode option
SBR10U45SP5-13
45V 10A
40uA typ
@15V @25C
50uA typ, 300uA max
@30V @25C

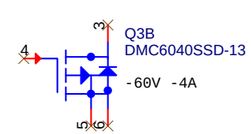


RevB(7/31/2015): C2 2.2uF/50V/1206 removed; output signal names added

| | | | |
|---|---|---|---|
| Monterey Bay Aquarium Research Institute 7700 Sandholdt Rd, Moss landing CA 95076 | | | |
| Engineer Klimov 831-775-1914 | Page Title **Battery Status Board** | | Project: 901400 |
| Size B | Doc. or Part Number <Doc> | File Name (auto) 11021167-BSB1 | Rev B |
| Page Modify Date (auto): Thursday, August 27, 2015 | | Sheet: 1 of 1 | |
| Design Modify Date (auto): Thursday, August 27, 2015 | | | |
| Full path (auto): U:\ORCAD PROJECTS\POWER-BUOY\11021167-BSB1-BATTERY-STATUS-BOARD\11021167-BSB1.DSN | | | |