Layout notes:
1. Traces current requirements 50mA MIN unless specified.
2. Copper area for regulator LT3010 50 sq. mm MIN @ 2 OZ copper
3. Galvanically insulated section

TBD:
1. dip switch for shutdown pin?
2. Surface mount load resistors? 3W, 5W?

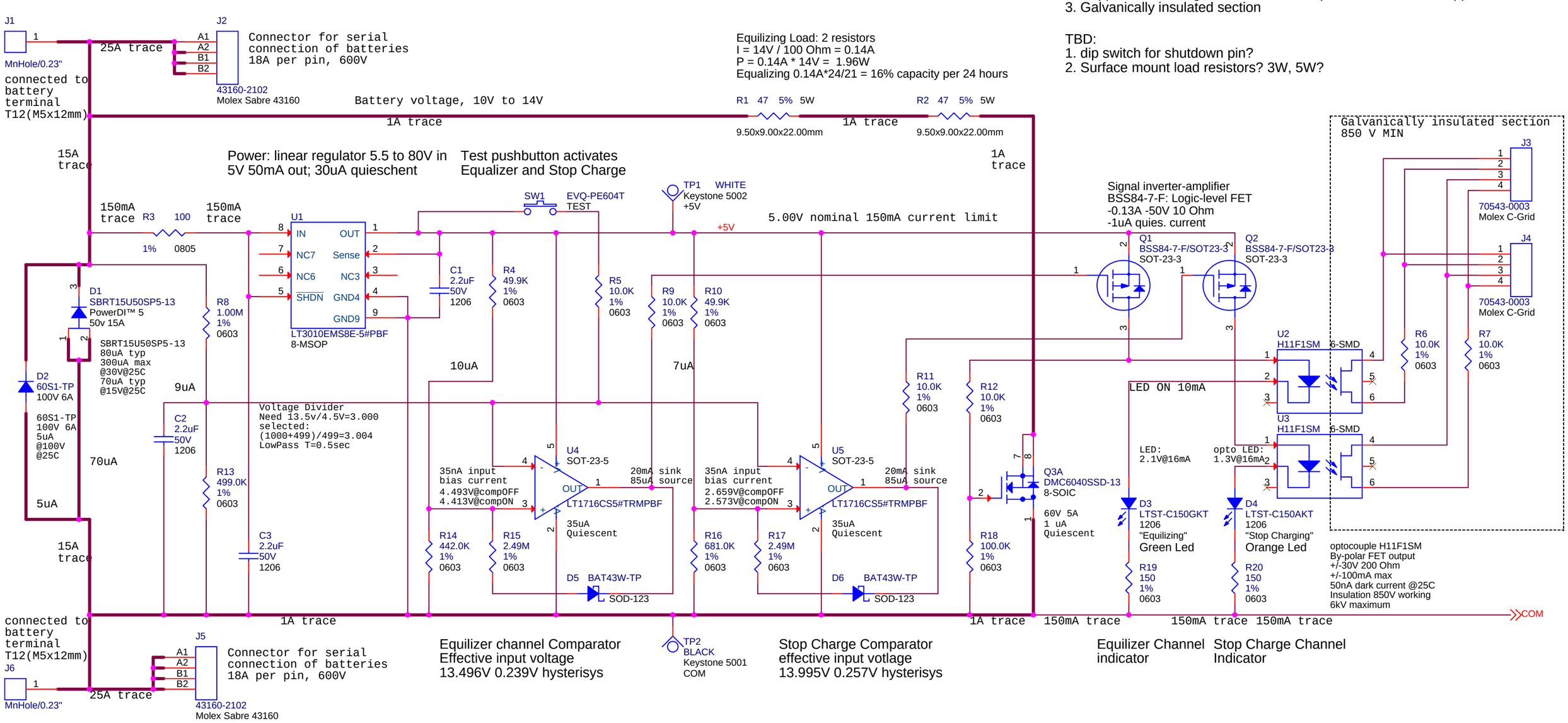

Power Sonic Lead-Acid batteries
Temperature compensation at cyclic use:
-At 50C, CV charge at 2.30+/-0.05V/cell or 13.80 +/- 0.3V
-At 40C, CV charge at 2.36+/-0.05V/cell or 14.16 +/- 0.3V
-At 30C, CV charge at 2.42+/-0.05V/cell or 14.52 +/- 0.3V
-At 25C, CV charge at 2.45+/-0.05V/cell or 14.7 +/- 0.3V
-At 20C, CV charge at 2.48+/-0.05V/cell or 14.88 +/- 0.3V
-At 10C, CV charge at 2.54+/-0.05V/cell or 15.24 +/- 0.3V
-At 0C, CV charge at 2.60+/-0.05V/cell or 15.6 +/- 0.3V

Temperature compensation for float:
-At 50C, float at 2.225+/-0.025V/cell or 13.35 +/- 0.15V
-At 40C, float at 2.245+/-0.025V/cell or 13.47 +/- 0.15V
-At 30C, float at 2.265+/-0.025V/cell or 13.59 +/- 0.15V
-At 25C, float at 2.275+/-0.025V/cell or 13.65 +/- 0.15V
-At 20C, float at 2.285+/-0.025V/cell or 13.71 +/- 0.15V
-At 10C, float at 2.305+/-0.025V/cell or 13.83 +/- 0.15V
-At 0C, float at 2.325+/-0.025V/cell or 13.95 +/- 0.15V

Blockign diode option
SBR10U45SP5-13
45V 10A
40uA typ
@15V @25C
50uA typ, 300uA max
@30V @25C

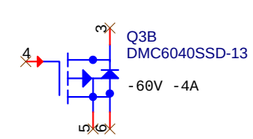

Monterey Bay Aquarium Research Institute 7700 Sandholdt Rd, Moss landing CA 95076			
Engineer Klimov 831-775-1914	Page Title **Battery Status Board**		Project: 901400
Size B	Doc. or Part Number <Doc>	File Name (auto) *11021167-BSB1*	Rev *
Page Modify Date (auto): *Monday, June 29, 2015*		Sheet: 1 of 1	
Design Modify Date (auto): *Monday, June 29, 2015*			
Full path (auto): *X:\TECHSERVICES\PCB_LAYOUT\OPEN_WORK_SPACE\11021167-BATTERY-STATUS-BOARD\11021167-BSB1.DSN*			