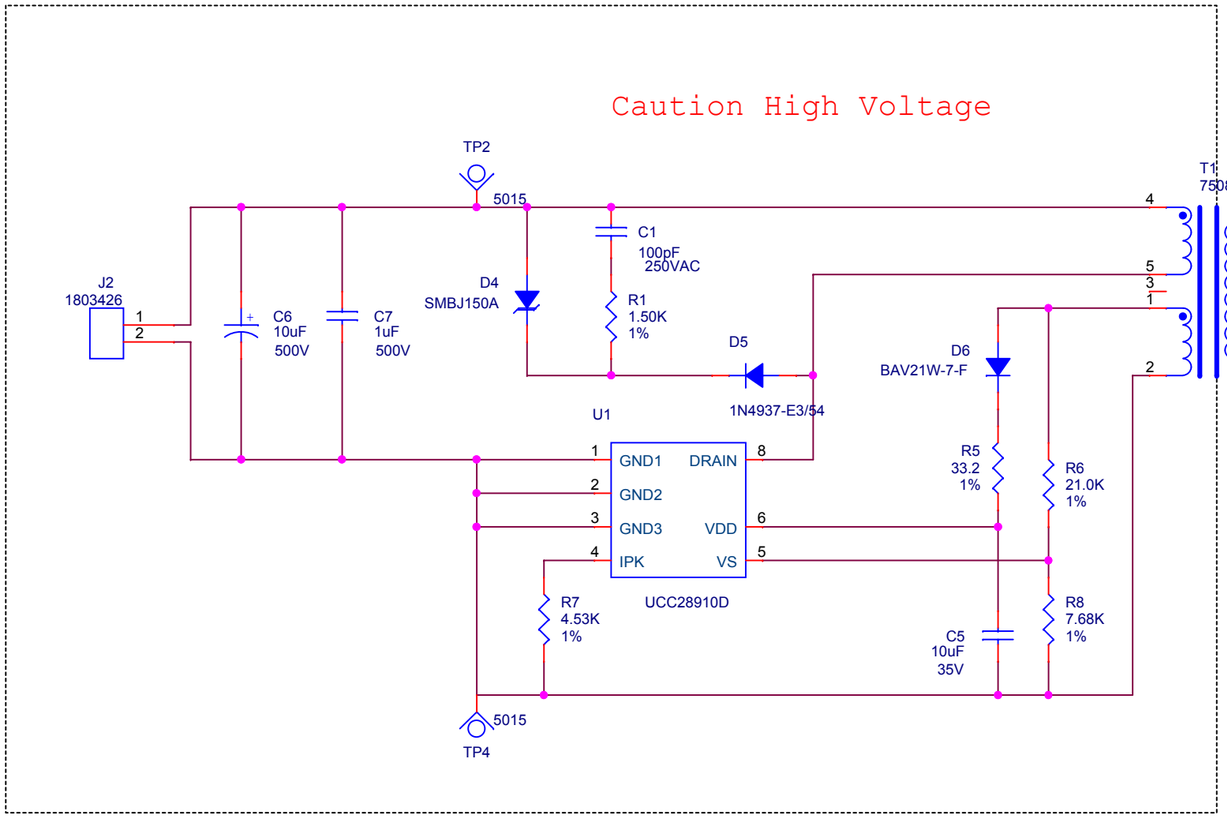

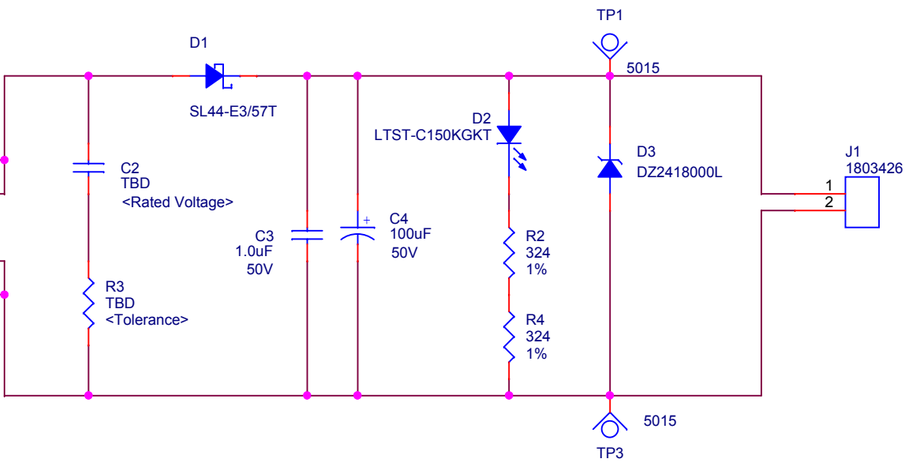

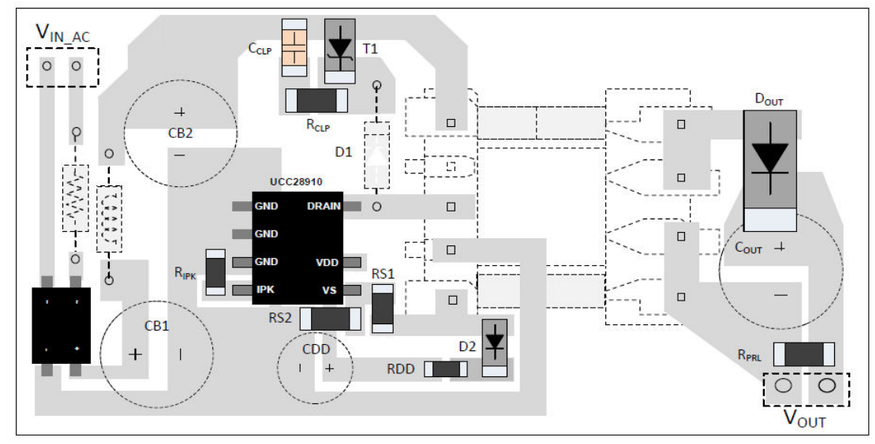

MONTEREY BAY AQUARIUM RESEARCH INSTITUTE
7700 SANDHOLDT ROAD
MOSS LANDING, CA 95039
(831) 775-1700 www.mbari.org

Copyright MBARI 2000

Title **PBbootstrap** /			Number **<Doc>**
Size **B**	Engineer **SJensen**	Layout **<Layout Eng.>**	Filename **PBbootstrap**	Rev **0**
	Date: Tuesday, February 03, 2015	Sheet 1 of 1	