PRODUCT SPECIFICATION

VN-110 TACTICAL IMU/AHRS

Sensor Datasheet (Hardware v3.1)

WARNING – This document contains Controlled Technical Data, export of which is restricted by the Export Administration Regulations ("EAR") (ECCN 7E994). Disclosure to foreign persons contrary to the EAR is prohibited. Violations of these export laws and regulations are subject to severe civil and criminal penalties.

The information and material contained within this document is confidential and proprietary to VectorNav Technologies, LLC and may not be reproduced, disseminated, or disclosed to any third party.

VECTORNAV

HIGHLIGHTS

< 1°/hr
Gyro In-Run Bias Stability

< 10 µg
Accel In-Run Bias Stability

0.05°
Pitch/Roll Accuracy

MIL-STD VN-110
MIL-STD-810; MIL-STD-461G; DO-160G; IP 68 Rated

5°/hr /√Hz
Gyro Noise Density (ARW)

< 0.04 mg/√Hz
Accelerometer Noise Density (VRW)

800 Hz
IMU Data

Low SWaP
56 x 56 x 23 mm; 125 grams; < 2 W

Product Overview

The VN-110 is a Tactical Grade Inertial Measurement Unit (IMU) and Attitude Heading Reference System (AHRS). The VN-110 incorporates the latest inertial sensor technology, combining 3-axis accelerometers, 3-axis gyroscopes and 3-axis magnetometers into a compact and rugged package. Along with providing calibrated sensor measurements, the VN-110 also computes and outputs a real-time 3D orientation solution that is continuous over the complete 360 degrees of motion.

Certified to MIL-STD and DO-160G standards, the VN-110 is suitable for the most demanding military and aerospace applications. For SWaP-C constrained applications, the VN-110 is also available in a miniature, embedded option: the VN-110E.

Calibration and Testing

Each individual VN-110 sensor undergoes a robust calibration and acceptance testing process at VectorNav's AS9100 certified manufacturing facility. Performance specifications are based on comprehensive field testing and results from real-world applications and are regularly tested to ensure continued conformance to such specifications.



VN-110

Features

Vector Processing Engine (VPE) 2.0 Toolboxes

Real-time magnetic & acceleration disturbance rejection, adaptive signal filtering and dynamic filter tuning.

Onboard Hard & Soft Iron Compensation

World Magnetic Model: WMM2016

World Gravity Model: EGM96

Onboard Gyro Drift Compensation

AHRS Kalman Filter tracks real-time estimation of the gyro bias and compensates for small perturbations.

Software Compatibility

The VN-110 shares a common communication protocol with the entire VectorNav product line.

Ease of Availibility

ITAR-free and Made in the USA; Short lead times.

User Configurable Messages

ASCII and VectorNav Binary messages.

Sensor Summary

- Continuous attitude solution over the complete 360° range of operation
- VectorNav Processing Engine (VPE) for disturbance rejection, adaptive filtering, dynamic filter tuning
- Real-time gyro bias tracking and compensation
- Hard/Soft Iron Compensation (Real-time and Manual 2D & 3D)
- Inputs for external magnetometers or velocity measurements (Airspeed, GPS)
- Individually calibrated for bias, scale factor, misalignment, and temperature over full operating range (-40°C to +85 °C)
- Coning and sculling integrals (ΔV's, Δθ's)
- World Magnetic & Gravity Reference Models

CONTENTS

1 AHRS PERFORMANCE 4

2 IMU SPECIFICATIONS 5
- 2.1 Accelerometer . . . 5
- 2.2 Gyroscope . . . 6
- 2.3 Magnetometer . . . 7

3 MECHANICAL 8
- 3.1 Size . . . 8
- 3.2 Environmental . . . 9

4 ELECTRICAL 10
- 4.1 Power . . . 11
- 4.2 General Purpose I/O . . . 12
- 4.3 Communication . . . 13

5 PRODUCT HANDLING AND INSTALLATION 14
- 5.1 Alignment and Fastening . . . 14
- 5.2 Magnetic and Vibration Considerations . . . 14
- 5.3 Maintenance . . . 14
- 5.4 Cabling . . . 14

VectorNav Support

Whether you are looking for details on the VN-110 or assistance with your application, a wealth of information is available to assist you in product design and development. Check out the *Inertial Systems Primer* on our website, and be sure to register for access to a wide range of resources:

PRODUCT SPECIFICATIONS	TECHNICAL NOTES	APPLICATION NOTES
▪ User Manual	▪ Time Synchronization	▪ Gimbal Stabilization & Pointing
▪ Interface Control Document	▪ Hard & Soft Iron Calibration	▪ Satellite Communications
▪ Datasheet	▪ External GNSS Aiding	▪ Lidar Mapping
▪ Quick Start Guide	▪ Firmware Update	▪ Aerial Photogrammetry

All VectorNav products are backed by our customer-focused, robust and responsive support ecosystem. Our team is committed to supporting you through your entire product life-cycle, from concept design to in-field support. Please feel free to contact us by phone or email, our global team of engineers and representatives is ready to work with you through every challenge you know of, and every challenge you don't.

+1.512.772.3615 support@vectornav.com

DOCUMENT CHANGE LOG

Revision R2

R. Cieri - 10/08/2025

- Fixed formatting issues in Product Handling and Installation section.
- Fixed minor text typos.
- Clarified that only random vibration at frequencies below sensor bandwidth impact sensor performance.
- Added warning for pinout view perspective.
- Added Mechanical Specification table to Environmental subsection.
- Updated Environmental Standards table to add/clarify MIL-STD-461G tests for Conducted Susceptibility.
- Added note regarding CS117 option to Environmental Standards table.
- Updated Reserved pin descriptions (removed ”for internal use”).

Revision R1

A. Weaver - 02/28/2024

- Initial release.

1 AHRS PERFORMANCE

Attitude

SPECIFICATION	MIN	TYP	MAX	UNITS	NOTES
Range (Heading/Yaw, Roll)	-180		180	deg	
Range (Pitch)	-90		90	deg	
Output Rate		400		Hz	User configurable.
Heading (Magnetic)		2		deg	RMS[1]
Pitch/Roll (Static)		0.05		deg	RMS
Pitch/Roll (Dynamic)		1		deg	RMS[2]
Angular Resolution		0.001		deg	
Heave Accuracy		5 or 5%		cm	
Delayed Heave Accuracy		2 or 2%		cm	

[1] With proper magnetic declination, suitable magnetic environment and valid hard/soft iron calibration.
[2] Velocity Aiding required for applications with sustained linear accelerations.

TABLE 1

2 IMU SPECIFICATIONS

2.1 Accelerometer

Accelerometer

SPECIFICATION	MIN	TYP	MAX	UNITS	NOTES
Range		±15		g	
In-Run Bias Stability			10	µg	
Noise Density			0.04	$mg/\sqrt{Hz}$	
Sample Rate		800		Hz	
Bandwidth		200		Hz	
Cross-Axis Sensitivity			0.05	deg	
Resolution		0.1		mg	

TABLE 2

Allan Deviation

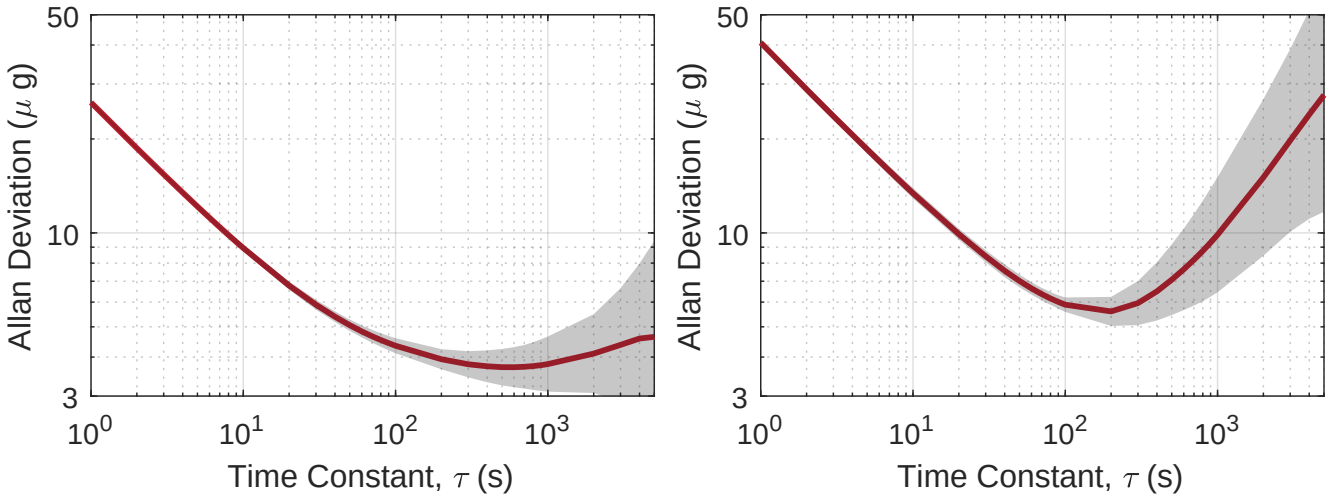

(a) XY-Axis Allan Deviation

(b) Z-Axis Allan Deviation

FIGURE 1

2.2 Gyroscope

Gyroscope

SPECIFICATION	MIN	TYP	MAX	UNITS	NOTES
Range		±490		°/s	[1]
In-Run Bias Stability		0.6	1	°/hr	
Noise Density		5		$°/\text{hr}/\sqrt{\text{Hz}}$	
Sample Rate		800		Hz	
Bandwidth		210		Hz	
Cross-Axis Sensitivity			0.05	deg	
Resolution		20		°/hr	

[1] Contact VectorNav for Extended Range Gyro option up to 2000 °/s.

TABLE 3

Allan Deviation

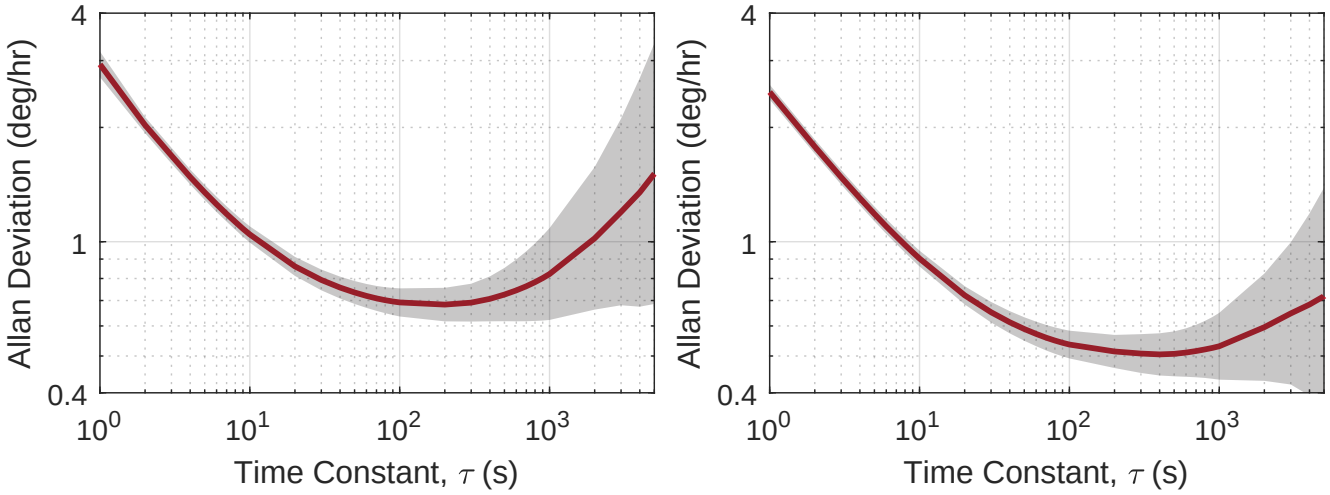

(a) XY-Axis Allan Deviation

(b) Z-Axis Allan Deviation

FIGURE 2

2.3 Magnetometer

Magnetometer

SPECIFICATION	MIN	TYP	MAX	UNITS	NOTES
Range		±2.5		G	
Noise Density		140		$\mu G/\sqrt{Hz}$	
Sample Rate		250		Hz	
Cross-Axis Sensitivity			0.05	deg	
Resolution		1.5		mG	

TABLE 4

3 MECHANICAL

3.1 Size

Dimensions

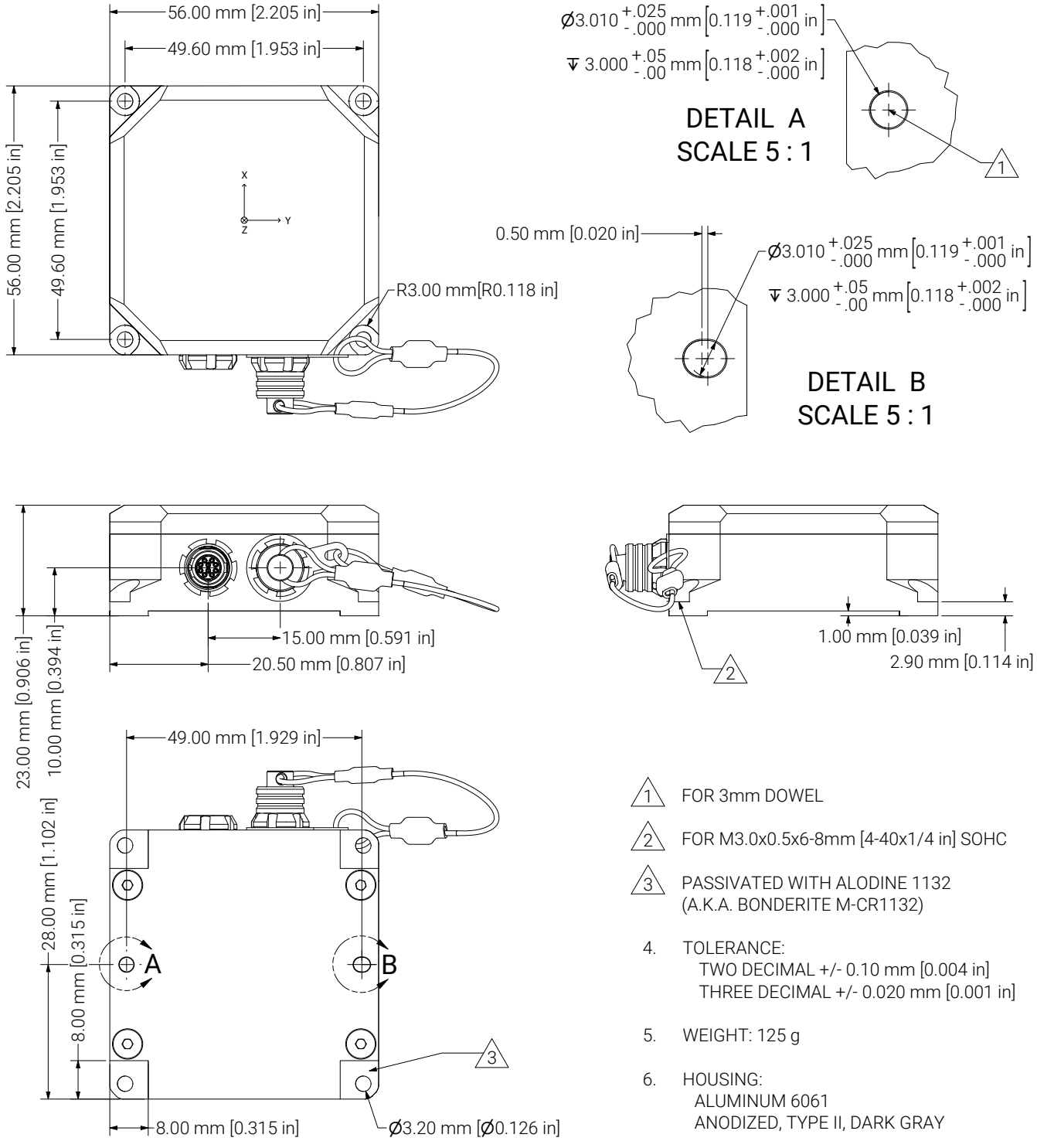

FIGURE 3

Mechanical Specifications

SPECIFICATION	DESCRIPTION
Weight	125 g
Dimensions	56 mm × 56 mm × 23 mm
Mounting Torque	2.5 N m and 2.0 N m for steel and aluminum bases, respectively
Recommended Alignment Pin	McMaster-Carr PN: 93600A267

TABLE 5

3.2 Environmental

Environmental

SPECIFICATION	MIN	TYP	MAX	UNITS	NOTES
Operating Temperature	-40		85	°C	
Storage Temperature	-40		85	°C	
MTBF	45000			Hr	[1]

[1] The environment assumption was an Airborne Uninhabited Cargo (AUC) with 100 % duty cycle, which includes environmentally uncontrolled areas which cannot be inhabited by an aircrew during flight. Contact VectorNav for more information.

TABLE 6

Environmental Standards

CHARACTERISTIC	STANDARD	DESCRIPTION
Vibration	MIL-STD-810G	
Turboprop	514.6	ANNEX C, Category 8
Rotorcraft	514.6	ANNEX E, Category 24
Shock	MIL-STD-810G	
Crash Hazard Shock	516.6	Procedure 5
EMI, Conducted Susceptibility	MIL-STD-461G	Contact VectorNav for option that passes CS117.
Power Leads	CS101	
Structure Current	CS109	
Bulk Cable Injection	CS114	
Impulse Excitation	CS115	
Damped Sinusoidal Transients	CS116	
EMI, Radiated Emissions	MIL-STD-461G	
Magnetic Field	RE101	
Electric Field	RE102	
EMI, Radiated Susceptibility	MIL-STD-461G	
Magnetic Field	RS101	
Electric Field	RS103	
Power	MIL-STD-1275E	
Temperature	DO-160G	
Ground Survival & Short-Term Operating Low	4.5.1	
Operating Low	4.5.2	
Ground Survival & Short-Term Operating High	4.5.3	
Operating High	4.5.4	
Dust & Humidity	IEC 60529	IP68

TABLE 7

4 ELECTRICAL

Pinout Schematic

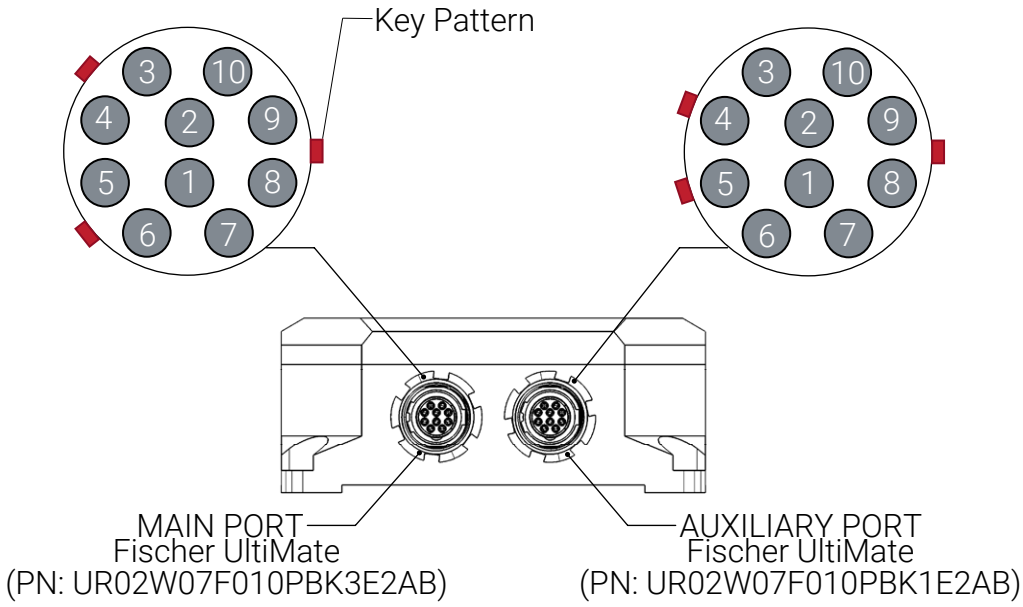

FIGURE 4

Pin assignment diagrams are given as viewed looking at the front of the sensor.

Main Port Pin Assignments

PIN	PIN NAME	TYPE	DESCRIPTION
1	SYNC_IN	Input	Input signal for synchronization purposes. Software configurable to either synchronize the measurements or the output with an external device
2	RESV	N/A	Reserved. Do not connect
3	SYNC_OUT	Output	Output signal used for synchronization purposes. Software configurable to pulse when ADC, IMU, or attitude measurements are available.
4	RX1+	Input	Serial RS-422 non-inverted input.
5	RX1-	Input	Serial RS-422 inverted input.
6	TX1-	Output	Serial RS-422 inverted output.
7	TX1+	Output	Serial RS-422 non-inverted output.
8	SIG_GND	Input	Ground reference for digital input/output signals.
9	VIN+	Supply	12 V to 34 V power input.
10	VIN-	Supply	Power ground (0 V).

TABLE 8

Aux Port Pin Assignments

PIN	PIN NAME	TYPE	DESCRIPTION
1	SYNC_IN_2	Input	Input signal for interfacing with an external IMU.
2	RESV	N/A	Reserved. Do not connect
3	RESV	N/A	Reserved. Do not connect
4	RX2+	Input	Serial RS-422 non-inverted input.
5	RX2-	Input	Serial RS-422 inverted input.
6	TX2-	Output	Serial RS-422 inverted output.
7	TX2+	Output	Serial RS-422 non-inverted output.
8	SIG_GND_2	Input	Ground reference for digital input/output signals.
9	VOUT+	Supply	12 V to 34 V power output.
10	VOUT-	Supply	Power ground (0 V). Tied directly to VIN-.

TABLE 9

4.1 Power

Input Power Supply

SPECIFICATION	MIN	TYP	MAX	UNITS	NOTES
Input Voltage (VIN)	12		34	V	
Power Consumption			2	W	
Current (VIN @ 24 V)		80		mA	

TABLE 10

Output Power Supply

SPECIFICATION	MIN	TYP	MAX	UNITS	NOTES
Output Voltage (VOUT)		VIN		V	
Output Current			0.5	A	Temp=25 °C

TABLE 11

VIN

The power supply on the VN-110 was designed to meet the requirements of MIL-STD-1275E which defines the operating voltage limits and transient voltage characteristics for electronic circuits in military ground vehicle platforms. For additional details about the MIL-STD certifications for the VN-110, refer to the Environmental section.

VOUT

The VOUT pins benefit from all the protective circuitry of the VIN pins; however, additional current protective circuitry is provided to protect the VN-110 from shorts. The VOUT pins act as a pass-through, so the VOUT pins will have the same power supply specifications as supplied to the VIN pins.

4.2 General Purpose I/O

SYNC_IN Specifications

SPECIFICATION	MIN	TYP	MAX	UNITS	NOTES
Input Logic-Low Voltage			0.8	V	
Input Logic-High Voltage	2.3			V	
Pulse Width	20			ns	
Pull-up Resistor		10		kΩ	
ESD Protection		±2.5		kV	

TABLE 12

SYNC_OUT Specifications

SPECIFICATION	MIN	TYP	MAX	UNITS	NOTES
Output Logic-Low Voltage			0.8	V	
Output Logic-High Voltage	2.9			V	
Pulse Width	20			ns	
Rise Time			5	ns	
Fall Time		3	6	ns	
Output Frequency	1		1000	Hz	
Jitter			20	µs	
Sink/Source Current	-15		15	mA	
ESD Protection		±2.5		kV	

TABLE 13

SYNC_IN_2 Specifications

SPECIFICATION	MIN	TYP	MAX	UNITS	NOTES
Input Logic-Low Voltage			0.8	V	
Input Logic-High Voltage	2.3			V	
Pulse Width	20			ns	
Pull-up Resistor		10		kΩ	
ESD Protection		±2.5		kV	

TABLE 14

SYNC_IN

The SYNC_IN pin is a 5 V tolerant input that drives SyncIn *Events*. It can be configured to detect either rising or falling edges. A SyncIn *Event* occurs when an internal counter exceeds a user defined SyncInSkipFactor. This allows SyncIn *Events* to occur at some multiple of the input signal such that a high-frequency input signal can be provided that is divided to the desired rate (eg. providing a 10 kHz signal that the sensor responds to only every 100 triggers will yield a 100 Hz response). At every SyncIn *Event* timeSyncIn is reset and syncInCount is incremented. SyncIn *Events* can also be configured to trigger several other actions (see the VN-110 Interface Control Document for more details).

SYNC_OUT

The SYNC_OUT pin is an output pin with configurable output polarity and pulse-width that is driven by SyncOut *Events*. A SyncOut *Event* occurs when an internal counter exceeds the user configurable SyncOutSkipFactor. The internal counter is incremented at a configurable rate defined by the SyncOutMode (See VN-110 Interface Control Document for more details).

SYNC_IN_2

The SYNC_IN_2 pin is a 5 V tolerant input that is reserve for interfacing with external IMUs. Leave as no connect if not in use. For more information about the external IMU capabilities of the VN-110, refer to the User Manual.

4.3 Communication

This sensor utilizes full galvanic isolated full-duplex transceivers on both the primary and secondary connections. This feature helps to guard against large ground-to-ground differentials and common-mode transients. The galvanic isolation also helps to protect against the formation of potentially dangerous ground loops between the navigation module and the host system. This is very important for cases where the power is provided from a different system than the host system communicating with the device. The galvanic isolation provides complete electrical separation between the power and data/communication interfaces, enabling the device to operate in situations where there is a significant ground potential difference between various systems.

UART-1/2 RS422 Driver Interface Specifications

SPECIFICATION	MIN	TYP	MAX	UNITS	NOTES
Differential Driver Output Voltage	2.1		5	V	
Difference in Magnitude of Driver Differential Output Voltage for Complementary Output States			0.2	V	
Driver Common Mode Output Voltage			3	V	
Difference in Magnitude of Driver Common Mode Output Voltage for Complementary Output States			0.2	V	
Maximum Driver Short-Circuit Current	-250		250	mA	
Data Rate	9600		921600	bps	
ESD Protection		±10		kV	

TABLE 15

UART-1/2 RS422 Receiver Interface Specifications

SPECIFICATION	MIN	TYP	MAX	UNITS	NOTES
Receiver Input Resistance	96	125		kΩ	
Receiver Termination Resistance Enabled	108	120	156	Ω	[1]
Receiver Input Current (RX- to RX+)	-100		125	µA	
Receiver Differential Input Threshold Voltage (RX- to RX+)	-0.2		0.2	V	
Receiver Differential Input Voltage (RX- to RX+)	-6		6	V	
Receiver Common Mode Input Voltage	-7		12	V	
Data Rate	9600		921600	bps	
ESD Protection		±10		kV	

[1] The stock configuration does not provide a termination resistor between pins RX- and RX+. If this feature is required it can be supplied as a special build option. Please contact VectorNav for more information.

TABLE 16

5 PRODUCT HANDLING AND INSTALLATION

5.1 Alignment and Fastening

When designing the installation location of the sensor, alignment pins can be used to precisely align the sensor to the system. Please refer to Table 5 for the recommended pins and torquing requirements.

5.2 Magnetic and Vibration Considerations

Magnetic disturbances and vibration are two forms of interference that can reduce performance and accuracy for an orientation sensor. In most applications it is not possible to avoid magnetic and vibration interference entirely, so the effect of these disturbances on the navigation sensor need to be minimized by careful design.

Magnetic Interference

Magnetic interference occurs when nearby objects emit either a static or time-varying magnetic field that interferes with the navigation sensor's ability to measure the background Earth's magnetic field which is used to estimate heading. Components such as electric motors, iron-core inductors, and current carrying wires can emit a magnetic field which will interfere with the VN-110.

Static magnetic fields do not vary with time. This type of static interference can be compensated for by performing a hard/soft iron calibration of the magnetometer on the VN-110 if the component creating the interference rigidly rotates with the sensor and always maintains the same distance and direction with respect to the sensor. If the source of the magnetic field rotates separately from the sensor, for instance is installed on a separate moving platform or arm, then it cannot be compensated for using a hard/soft iron calibration. Where possible attempt to locate the sensor as far away from sources of magnetic interference as possible.

Dynamic magnetic fields vary with time and are created by items such as electric motors or current carrying wires. This form of magnetic distortion is very difficult for the sensor to handle without adverse effect on navigation performance. When designing the navigation sensor into your product pay careful attention to the location of current carrying conductors and their location with respect to the sensor. Where possible move these wires as far away from the sensor as possible to reduce its effect on the sensor's performance.

Vibration

The VN-110 has been incorporated into numerous helicopter, racing vehicles, and fixed winged aircraft applications. Whether your application is one of the aforementioned or another use case, there are a few important considerations with regard to vibration when using the VN-110.

VectorNav recommends rigidly mounting the sensor with no vibration isolation. Vibration isolation is difficult to implement correctly and can degrade the performance of the sensor if done incorrectly. However, if isolation is determined to be necessary, the best practice is to isolate the subsystem that the VN-110 is on or isolate the source of vibration.

Note that random vibrations at frequencies below the accelerometer bandwidth on the order of 4.5 g RMS will saturate the accelerometers, causing significant performance degradation of the navigation filters. Vibrations of higher frequency than the sensor bandwidth have minimal impact on the sensor.

5.3 Maintenance

There is no recommendation for returning the unit for recalibration. The factory calibrations are effective over the life of the part.

5.4 Cabling

The VN-110 uses a 10-Pin Fischer UltiMate connector for the primary and auxiliary ports, each with different keying to prevent inadvertent cable swaps. VectorNav manufactures various cables at various lengths for the primary and auxiliary ports, including cables terminated in: (a) a DB15, (b) USB, or (c) a pigtail cable. Contact VectorNav for the full suite of manufactured cables. When building cables, VectorNav uses the connectors *Fischer UltiMate UP01L07 M010S BK3 Z2ZB* for the primary port and *Fischer UltiMate UP01L07 M010S BK1 Z2ZB* for the auxiliary port. Customers building their own cable should contact Fischer Connectors directly for additional connector options.



VectorNav Technologies, LLC
10501 Markison Rd
Dallas, TX 75238, USA

Tel: +1.512.772.3615
Email: sales@vectornav.com
Web: vectornav.com

© 2023 VectorNav Technologies, LLC. All rights reserved.
VectorNav and the Diamond & Triangles logo are trademarks of VectorNav Technologies, LLC.
Version 25-110-31-R2