THE INFORMATION CONTAINED IN THIS DRAWING IS THE SOLE PROPERTY OF MBARI ANY REPRODUCTION IN PART OR WHOLE WITHOUT THE WRITTEN PERMISSION OF MBARI IS PROHIBITED.

REVISIONS			
REV.	DESCRIPTION	DATE	APPROVED
	INITIAL RELEASE		

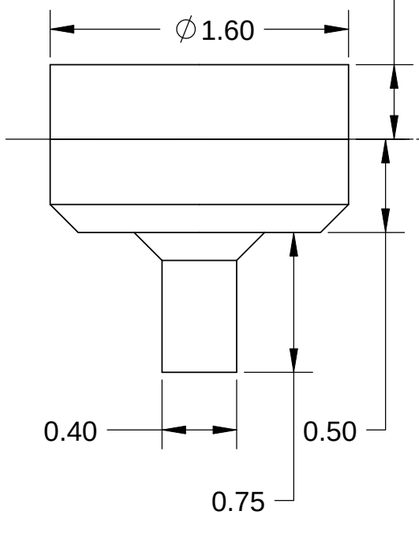

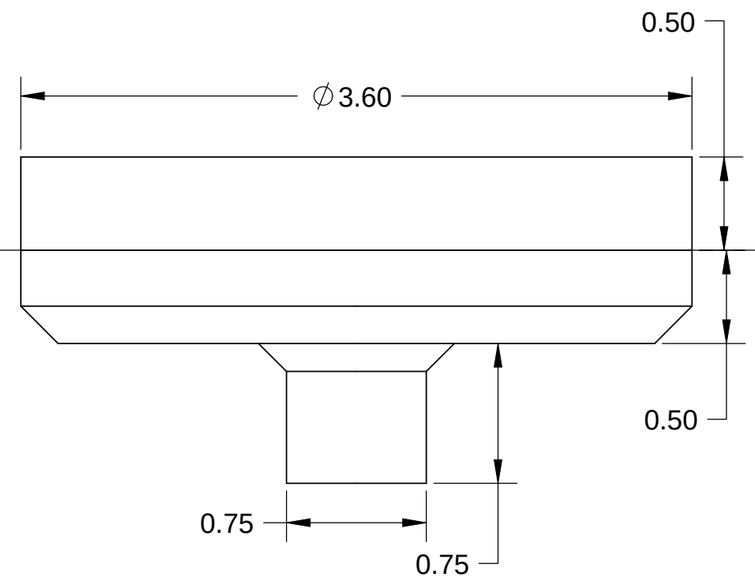

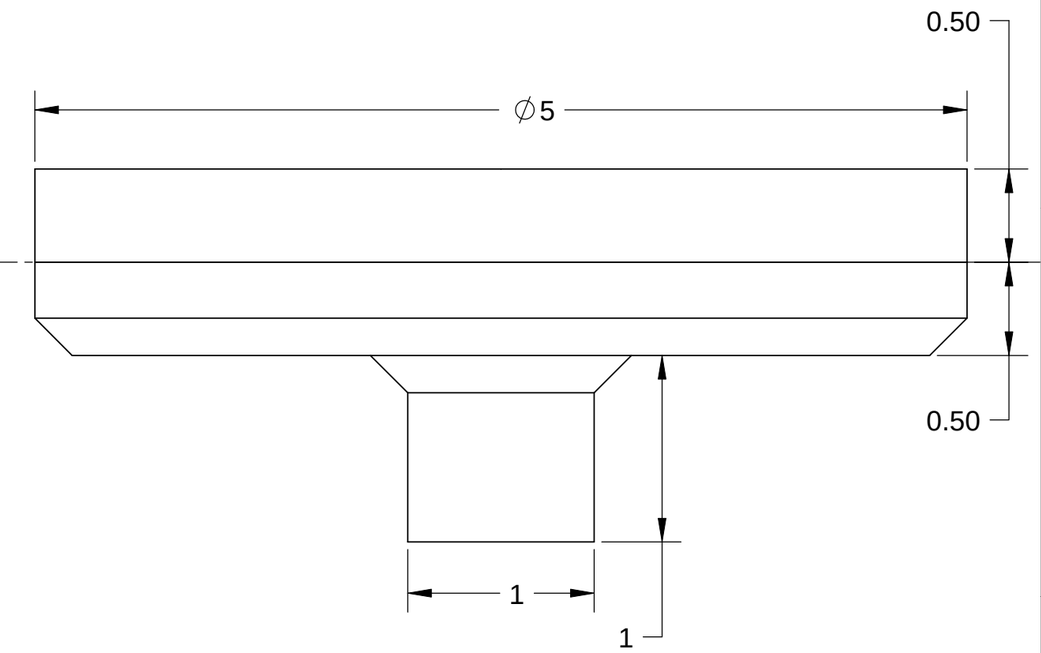

Awp = 2.01 m^2

Disp = 1.06m^3 = 1086.5 kg SW

Reserve Buoyancy = 0.8m^3

Mass = 738kg

CG = -0.67 m

CB = -0.30 m

Foil Weight in Water = 3418.8N
= 766.7 lbs

Awp = 10.18 m^2

Disp = 5.26m^3 = 5217.0 kg SW

Reserve Buoyancy = 5.09 m^3

Mass = 4537 kg

CG = -0.52 m

CB = -0.28 m

Foil Weight in Water = 8368 N
= 1877 lbs

Awp = 19.63 m^2

Disp = 10.37m^3 = 10627 kg SW

Reserve Buoyancy = 9.81 m^3

Mass = 9038 kg

CG = -0.63 m

CB = -0.30 m

Foil Weight in Water = 15590 N
= 3496 lbs

BILL OF MATERIALS

Shop / Q.C.		UNLESS OTHERWISE SPECIFIED TOLERANCES ARE:				APPROVALS	DATE	Monterey Bay Aquarium Research Institute
Inspector		1 PLACE DIM ±	2 PLACE DIM ±.	3 PLACE DIM ±.	ANGLES ±1°	DRAWN NAME	9/27/00	MBARI 7700 Sandholdt RD. Moss Landing, CA 95039 PH: (831) 775-1700
Shop Foreman		1. DIMENSIONS ARE IN METERS				ENGINEER NAME	9/27/00	
Engineer						CHECKED		
NEXT ASSY Description	NEXT ASSY Number					PROJECT NO. XXX		CylBuoys
						PROJECT ZZZZZZZZ		
Application		DO NOT SCALE DRAWING				WEIGHT		SIZE B · DWG. NO. 100XXXDWG · REV.
								SCALE 1:32 · CAD FILE: MECH ENG ON TORNADO · SHEET 1 OF 1