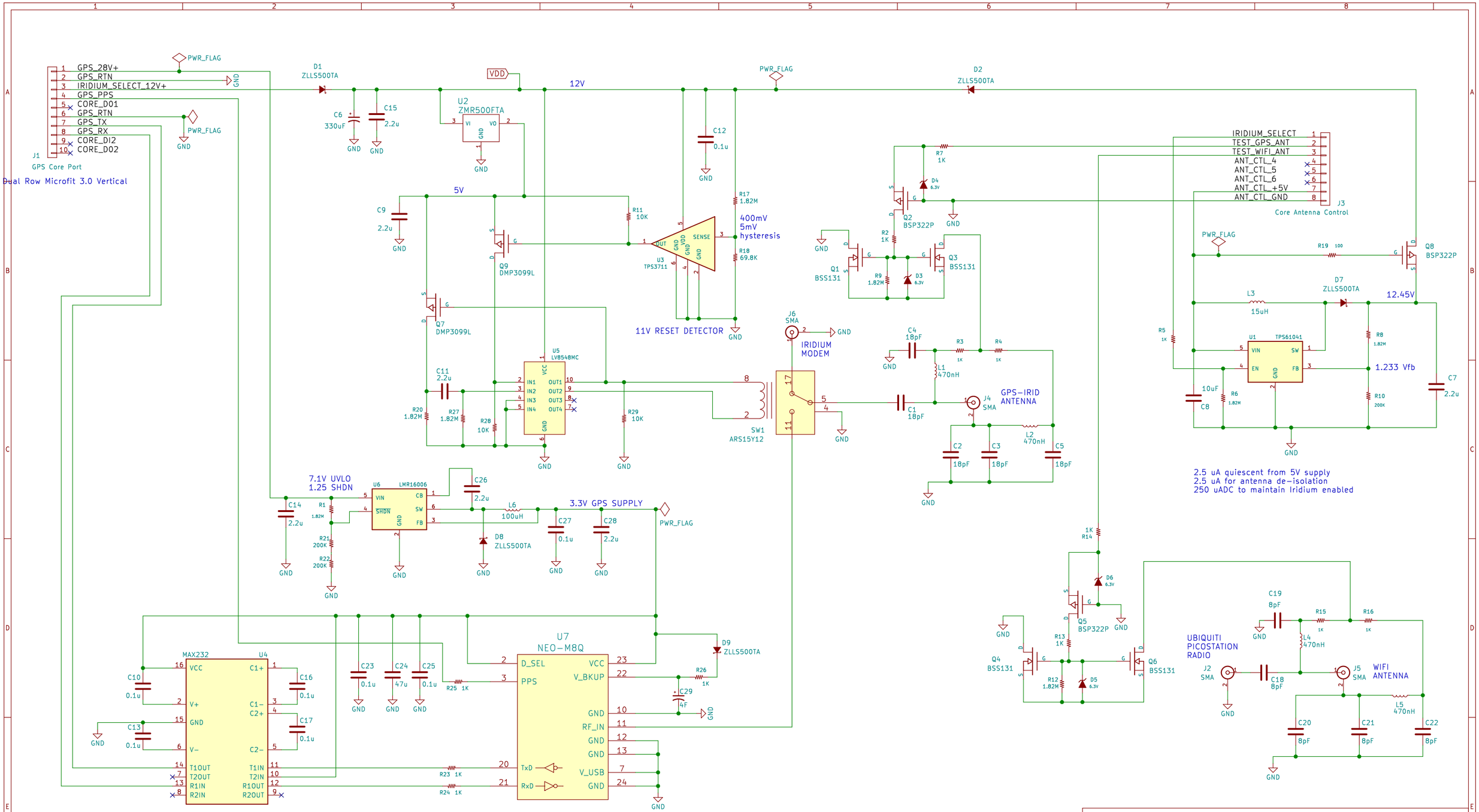

Daniel Gomez-Ibanez

Sheet: /
File: 108185.sch

Title: 108185 DUAL ANT SWITCH WITH ISOLATOR AND GNSS

Size: USLedger	Date: 2016-10-06	Rev: F
KiCad E.D.A. kicad 4.0.4-stable		Id: 1/1