THE INFORMATION CONTAINED IN THIS DRAWING IS THE SOLE PROPERTY OF MBARI ANY REPRODUCTION IN PART OR WHOLE WITHOUT THE WRITTEN PERMISSION OF MBARI IS PROHIBITED.

REVISIONS

REV.	DESCRIPTION	DATE	APPROVED
	INITIAL RELEASE	X/XX/00	J.E.

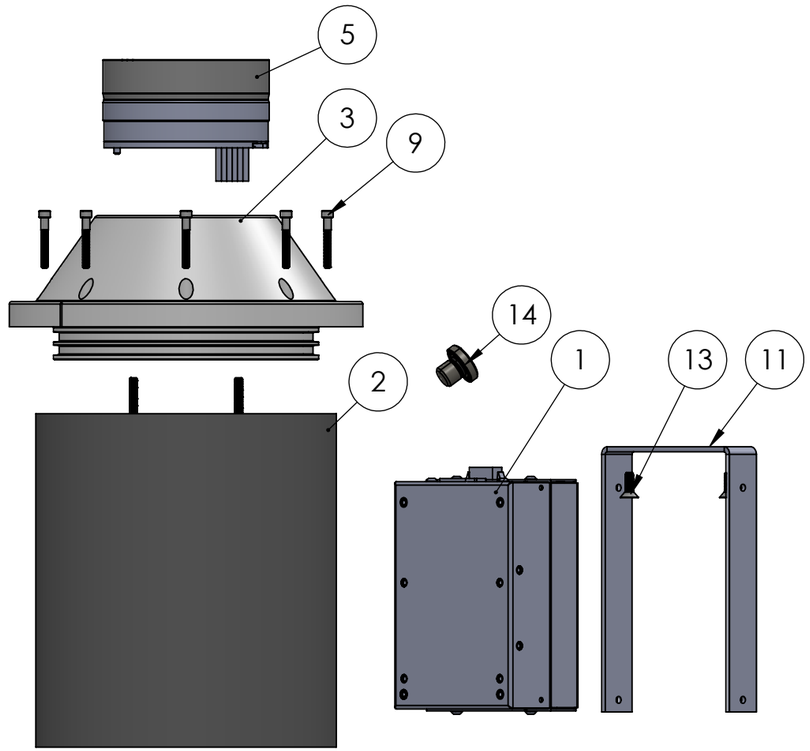

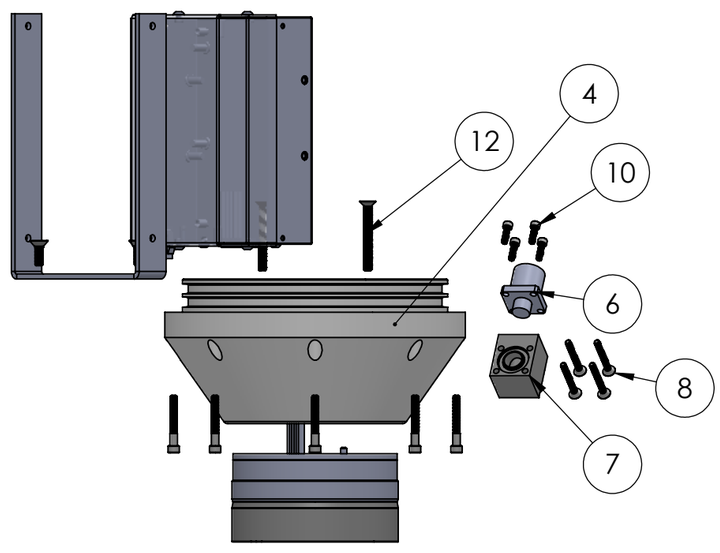

ITEM NO.	UNIT QTY.	Part_Number	DESCRIPTION	Vendor	MATERIAL
14	1	00669-001	#4 Dual Seal Vent Plug	Prevco	316 SST
13	4	90585A228	8-32 x 1/2" Hex Drive Flat head	McMaster	316 SST
12	6	92125A204	M4x0.7mm x 35mm Flat head Screw	McMaster	18-8 SST
11	2	P-100221229-18	Pathfinder OEM DVL Bracket		5052 Aluminum
10	4	92185A108	4-40 x 3/8 SHCS	McMaster	316 SST
9	16	9218A153	6-32 x 1" SHCS	McMaster	316 SST
8	6	90585A208	4-40 x 1 Flat head allen screw	McMaster	316 SST
7	1	P-100221232-18	Right Angle Mount for MKS3	MBARI	Black Delrin
6	1	MKS-310-FCR	10 pin Bulkhead Electrical Connector	Teledyne Impulse	0.010
5	2		OEM Pathfinder Transducer	Teledyne RDI	
4	1	P-100221231	UpDown Pathfinder DVL Endcap	MBARI	34 psu Seawater
3	1	P-100221231	UpDown Pathfinder DVL Endcap	MBARI	34 psu Seawater
2	1	P-100221229-18	UpDown Pathfinder DVL Tube	MBARI	POM Delrin (Black)
1	2		OEM Pathfinder 600 kHz DVL	Teledyne RDI	

BILL OF MATERIALS

Shop / Q.C.

Inspector

Shop Foreman

Engineer

NEXT ASSY Description | NEXT ASSY Number

Application

UNLESS OTHERWISE SPECIFIED TOLERANCES ARE:

1 PLACE DIM	2 PLACE DIM	3 PLACE DIM	ANGLES
±1/16	±.02	±.005	±1°

1. DIMENSIONS ARE IN INCHES
2. DIMENSION LIMITS HELD AFTER PLATING.
3. REMOVE BURRS AND SHARP EDGES .015 MAX.
4. MACHINED FILLET RADII .0150-.030.
5. MACHINED DIAMETERS ON A COMMON CENTERLINE CONCENTRIC WITHIN .005
6. PERPENDICULARITY & PARALLELISM OF MACHINED SURFACES .002 PER INCH. MAX .012 INCHES FOR SINGLE SURFACE.

DO NOT SCALE DRAWING

APPROVALS DATE

DRAWN B. Hobson

ENGINEER B. Hobson

CHECKED

PROJECT NO.

PROJECT

WEIGHT lb.

Monterey Bay Aquarium Research Institute
MBARI
7700 Sandholdt RD.
Moss Landing, CA 95039
PH: (831) 775-1700

Up-Down Pathfinder DVL Assembly

SIZE B | DWG. NO. A-100221228-18 | REV.

SCALE 1:10 | CAD FILE: MECH ENG ON TORNADO | SHEET 1 OF 1

NOTES:(CONT. FROM TITLE BLOCK)