WorkHorse

Monitor, Sentinel, Rio Grande, and Mariner

Acoustic Doppler Current Profiler

TECHNICAL MANUAL

P/N 957-6150-00 (April 2005)

RD Instruments

Acoustic Doppler Solutions

Table of Contents

1 Introduction 1
1.1 Getting Started 1
1.2 Conventions Used in Manuals 2
1.3 WorkHorse Models and Options 3
1.4 WorkHorse Care 5
1.4.1 General Handling Guidelines 5
1.4.2 Assembly Guidelines 6
1.4.3 Deployment Guidelines 6
1.5 System Overview 7
1.6 Unpacking 9
1.6.1 Inventory 10
1.6.2 Visual Inspection of the WorkHorse 10

2 Installation 11
2.1 Bottom Mounts 12
2.2 Buoy Mounts and Load Cages 13
2.3 Over-the-Side Mounting 15
2.3.1 Floating Objects 15
2.3.2 Example of an Over-the-Side Mount 16
2.3.3 Over-the-Side Mounting Special Considerations 17
2.4 In-Hull Mounting 17
2.4.1 Transducer Head Mounting Considerations 17
2.4.2 Location 17
2.4.3 Sea Chest In-Hull Mounting 18
2.4.4 Mounting Considerations 19
Orientation 19
Fairing 20
Acoustic Window 20
Free Flow and Windows 22
Air Bubbles 23
Flow Noise 24
Corrosion and Cathodic Disbondment 24
Ringing 24
Acoustic Isolation 25
Maintenance 26
Mariner Deck Box Mounting Considerations 27
2.4.5 Cabling Considerations 28
2.5 Computer Considerations 29
2.6 Gyrocompass Interface Considerations 30
2.6.1 Determining the Synchro Stator Voltage 32
2.6.2 Determining the Size of the Scaling-Resistor Pack 33
2.6.3 Installing the Scaling-Resistor Pack and W-Jumpers 34
2.6.4 Determining and Setting the Synchro Turns Ratio 34
2.6.5 Stepper Interface 35
2.6.6 Testing the Gyro Interface 36
2.7 Navigation Interface Considerations 38
2.8 Power Considerations 38
2.8.1 Monitor/Sentinel Power Considerations 38
2.8.2 Rio Grande Power Considerations 38
2.8.3 Mariner Power Considerations 39
2.9 Installation Procedures (Overview) 40
2.10 Alignment Procedures (Overview) 41

3 Maintenance 43
3.1 I/O Cable and Dummy Plug 43
3.1.1 Disconnecting the I/O Cable or Dummy Plug 43
3.1.2 Connecting the I/O Cable or Dummy Plug 44
3.2 WorkHorse Disassembly 45
3.2.1 End-Cap Removal Procedures 45

3.2.2 Transducer Head Assembly Removal....46
3.3 Workhorse Re-assembly....46
3.3.1 O-ring Inspection and Replacement....47
3.3.2 End-cap Replacement....48
3.3.3 Transducer Head Assembly Replacement....49
3.4 Mariner Adapter Plate....50
3.4.1 Installing the Adapter Plate....51
3.4.2 Removing the Adapter Plate....53
3.5 Sentinel Battery Packs....53
3.5.1 Sentinel Battery Replacement....53
3.5.2 External Battery Case Battery Replacement....54
3.6 Compass Calibration....56
3.6.1 Preparing for Calibration....56
3.6.2 Compass Calibration Verification....57
3.6.3 Compass Calibration Procedure....58
3.7 Fuse Replacement....60
3.8 Communications Setting....62
3.9 Firmware Upgrades....62
3.10 Feature Upgrades....63
3.11 PC Card Recorder....64
3.12 Desiccant Bags....65
3.13 Sealing the Workhorse for a Deployment....66
3.14 Prevention of Biofouling....66
3.14.1 Controlling Biofouling....67
3.14.2 Recommended Antifouling Paints....68
3.14.3 Applying Antifouling Paints....68
3.15 Thermistor Maintenance....70
3.16 Pressure Sensor Maintenance....70
3.17 Storage and Shipping Maintenance....72
3.17.1 Removal of Biofouling....72
3.17.2 Transducer Head Inspection....72
3.17.3 Final Storage or Shipping Preparation....73
3.18 Returning WorkHorses to RDI for Service....74
3.18.1 Domestic Shipments....74
3.18.2 International Shipments....75
3.19 Spare Parts....77
3.20 Parts Location Drawings....78
3.21 High Pressure Housings....83
3.21.1 High-Pressure Housing Disassembly....83
High-Pressure End-Cap Removal Procedures....83
High-Pressure Transducer Head Assembly Removal....84
3.21.2 High-Pressure Workhorse Re-assembly....85
3.21.3 High-Pressure O-ring Inspection & Replacement....85
High-Pressure End-cap Replacement....87
High-Pressure Transducer Head Replacement....88
3.21.4 Zinc Anode Inspection and Replacement....90
Zinc Anode Inspection....90
Zinc Anode Electrical Continuity Check....90
Zinc Anode Replacement....91
3.21.5 Protective Coating Inspection and Repair....91
3.21.6 High-Pressure Systems Spare Parts....93
3.21.7 High-Pressure Parts Location Drawings....93

4 Testing the WorkHorse....96

4.1 Testing the WorkHorse with *WinSC*....96
4.2 Testing the WorkHorse with *BBTalk*....97
4.3 Test Results....98
4.3.1 Deploy Commands List....98
4.3.2 System Commands List....99
4.3.3 Time Set....99
4.3.4 Recorder Free Space....99
4.3.5 Display System Parameters....100

4.3.6 Instrument Transformation Matrix 100
4.3.7 Pre-deployment Test 101
4.3.8 Display Heading, Pitch, Roll, and Orientation 101
4.3.9 Beam Continuity 102
4.4 Dock Side Tests 102
4.4.1 Dock Side Diagnostic Test 102
4.4.2 Dock Side Peripheral Tests 103
4.5 Sea Acceptance Tests 106
4.5.1 Interference Test 107
Interference Test Platform Test Setup 107
Interference Test Computer Screen Display Setup 108
How to Identify Interference 108
4.5.2 Water Profile Range Test 109
Water Profile Range Platform Test Setup 109
Water Profile Range Computer Screen Display Setup 110
How to Determine the Maximum Range of the ADCP 110
4.5.3 Ringing Test 111
Ringing Test Platform Test Setup 112
Ringing Test Computer Screen Display Setup 112
How to Determine the Ringing Test Results 112
4.5.4 Water Profile Reasonableness Test 112
Water Profile Reasonableness Platform Test Setup 113
Water Profile Reasonableness Display Setup 114
How to Determine Water Profile Reasonableness 114
4.5.5 Bottom Tracking Test 114
Bottom Tracking Platform Test Setup 115
Bottom Tracking Computer Screen Display Setup 115
How to Determine Bottom Tracking Reasonableness 115

5 Troubleshooting 116
5.1 Equipment Required 116
5.2 Basic Steps in Troubleshooting 117
5.3 Troubleshooting the WorkHorse 118
5.3.1 Troubleshooting Safety 118
5.4 Troubleshooting a Communication Failure 119
5.4.1 Incorrect Wakeup Messages 120
5.4.2 Check the Power 121
5.4.3 Check the I/O Cable 121
5.4.4 Check the Mariner Cables 122
5.4.5 ADCP Checks 123
5.4.1 Mariner Deck Box Checks 123
5.5 Troubleshooting a Built-In Test Failure 124
5.5.1 When to use the Spare Boards Kit 125
5.5.2 Installation of the Spare Board Kit 127
5.5.3 Remove the Original Set of Boards 127
5.5.4 Installing the Spare Board Kit 129
5.5.5 Installing the Beam Cosine Matrix 131
5.5.6 Testing the System 132
5.6 Troubleshooting a Beam Failure 132
5.7 Troubleshooting a Sensor Failure 133
5.7.1 Fault Log 133
5.8 Technical Support 134
5.9 Workhorse Cables 135
5.10 System Overview 142
5.10.1 Operating Modes 142
Command Mode 142
Ping Mode 143
5.10.2 Overview of Normal WorkHorse Operation 144
5.10.3 Functional Description of Operation 145
Input Power 145
Board Descriptions 146
Sensors 147

6 Specifications 153

7 Outline Installation Drawings 159

961-6031 160
967-6007 161
967-6008 Sheet 1 162
967-6008 Sheet 2 163
967-4002 164
967-6009 Sheet 1 165
967-6009 Sheet 2 166
967-6025 Sheet 1 167
967-6025 Sheet 2 168
967-6026 Sheet 1 169
967-6026 Sheet 2 170
967-6032 Sheet 1 171
967-6032 Sheet 2 172
967-6033 Sheet 1 173
967-6033 Sheet 2 174
967-6034 Sheet 1 175
967-6034 Sheet 2 176
967-6035 Sheet 1 177
967-6035 Sheet 2 178
967-6044 Sheet 1 179
967-6044 Sheet 2 180
967-6045 Sheet 1 181
967-6045 Sheet 2 182

8 Glossary 183

List of Figures

Figure 1. WorkHorse Sentinel ADCP Overview 8
Figure 2. WorkHorse Mariner/Monitor/Rio Grande ADCP Overview 9
Figure 3. WorkHorse Transducer Face View 10
Figure 4. WorkHorse End-Cap Connector View 11
Figure 5. RD Instruments Bottom Mount 12
Figure 6. View from the Bottom 12
Figure 7. Trawl Resistant Bottom Mount 13
Figure 8. Deep-Water Mount 13
Figure 9. Buoy Mount with External Battery 13
Figure 10. Subsurface Buoy 14
Figure 11. Buoy Mount 14
Figure 12. Load Cage 14
Figure 13. Over-the-Side Mount 15
Figure 14. Mounting an ADCP to a Platform 16
Figure 15. Sea Chest Mounted Transducer (Without an Adapter Plate) 18
Figure 16. Sea Chest Mounted Transducer (With Mariner Adapter Plate) 19
Figure 17. Barnacle Damage to Urethane Face 26
Figure 18. Typical Mariner Interface Cable Layout (Overview) 28
Figure 19. Gyro Interface Board 32
Figure 20. Transducer Misalignment Reference Points 42
Figure 21. Removing the I/O Cable 44
Figure 22. Mariner Adapter Plate 50
Figure 23. BBTalk Command History Box 57
Figure 24. Compass Calibration 59
Figure 25. Communication Switch and Fuse 62
Figure 26. Installing Feature Upgrades 63
Figure 27. Feature Upgrade Completed 64

Figure 28. PC Card Recorder 64
Figure 29. Barnacle Damage 67
Figure 30. Antifouling Paint Applied to a WorkHorse Sentinel 69
Figure 31. Thermistor and Pressure Sensor 70
Figure 32. Workhorse Pressure Sensor (Exploded View) 71
Figure 33. Mariner/Monitor and Rio Grande Parts Location (200 and 500 Meter Systems) 78
Figure 34. Sentinel Parts Location (200 and 500 Meter Systems) 79
Figure 35. Sentinel End-cap and Battery Pack Parts Location 80
Figure 36. External Battery Pack Parts Location 81
Figure 37. Workhorse Board Locations 82
Figure 38. High Pressure O-Ring Detail View 87
Figure 39. 1000 meter WorkHorse Parts Location 94
Figure 40. 3000 and 6000 meter WorkHorse Parts Location 95
Figure 41. Using WinSC to Test an ADCP 97
Figure 42. Using BBTalk to Test an ADCP 98
Figure 43. Testing the Navigation Connections 104
Figure 44. Interference Test 108
Figure 45. Water Profile Reasonableness Course 113
Figure 46. Transmit Cable 128
Figure 47. PC Board Connectors 129
Figure 48. Ground Jumper 130
Figure 49. Mounting Hardware 131
Figure 50. Monitor and Sentinel I/O Cable Wiring 135
Figure 51. Rio Grande I/O Cable Wiring 136
Figure 52. Mariner I/O Cable Wiring 136
Figure 53. Mariner Deck Box to Computer Serial Cable 137
Figure 54. Mariner Gyro Cable 138
Figure 55. Mariner/Monitor/Sentinel Internal I/O Cable (End-Cap to PIO Board) Wiring 139
Figure 56. Rio Grande Internal I/O Cable (End-Cap to PIO Board) Wiring 140
Figure 57. External Battery Pack “Y” Cable 141
Figure 58. External Battery Case Internal Wiring 141
Figure 59. RS232-to-RS422 Converter Wiring (25-Pin to 9-Pin) 142
Figure 60. WorkHorse Wake-up and Timer Logic 148
Figure 61. Mariner/Monitor/Sentinel DC Power Path 149
Figure 62. Rio Grande DC Power Path 150
Figure 63. WorkHorse Block Diagram 151
Figure 64. WorkHorse PC Board Locations 152

List of Tables

Table 1: Visual Inspection Criteria 10
Table 2: Window Thickness 21
Table 3: Wavelength of sound in seawater (1500 m/s sound speed) 23
Table 4: Minimum Computer Hardware Requirements 29
Table 5: Gyro Interface Options by Model 31
Table 6: Acceptable Gyro Interface Configurations 31
Table 7: Standard Synchro Stator Voltages and Scaling Resistance 33
Table 8: Natel Chip, Resistor Pack, and W-jumper Sockets 34
Table 9: Gyro Interface Switch 1 Settings 35
Table 10: Gyro Interface Switch 2 Settings 35
Table 11: Stepper Interface Resistor Values 36
Table 12: Gyro Interface Troubleshooting Guide 37
Table 13: Workhorse Spare Parts 77
Table 14: High-Pressure Systems Spare Parts 93
Table 15: Dock Side Test Setup 102

Table 16: Dock Side Peripheral Tests Setup 104
Table 17: Dock Side Peripheral Test Results 105
Table 18: Command Files 107
Table 19: Interference Test Minimum Water Depth Requirement 107
Table 20: Water Profile Range Test Minimum Water Depth 109
Table 21: Water Profile Range Test Platform Speed 110
Table 22: Required Blanking Distance 111
Table 23: Ringing Test Water Depth Requirement 112
Table 24: Water Profile Reasonableness Water Depth Requirement 113
Table 25: List of Least Replaceable Assemblies 116
Table 26: Required Test Equipment 117
Table 27: Pre-deployment Test (PA) Possible Cause of Failures 126
Table 28: Mariner and Monitor Water Profiling 154
Table 29: Sentinel Water Profiling 155
Table 30: Long Range Mode 155
Table 31: Rio Grande Standard Water Profiling 155
Table 32: Rio Grande Shallow Water Mode 156
Table 33: Rio Grande Shallow Water, Slow Flow Mode 156
Table 34: Bottom Track Profile Parameters 156
Table 35: Profile Parameters 156
Table 36: Echo Intensity Profile 156
Table 37: Standard Sensors 157
Table 38: Transducer and Hardware 157
Table 39: Environmental Specifications 158
Table 40: Power 158
Table 41: Outline Installation Drawings 159

RD Instruments
Acoustic Doppler Solutions

WorkHorse Technical Manual

1 Introduction

Thank you for purchasing a RD Instruments (RDI) WorkHorse Broadband Acoustic Doppler Current Profiler (ADCP). This Technical Manual is designed to help WorkHorse users to get familiar with their system.

1.1 Getting Started

You are probably eager to get started, but take a moment to read a few words of guidance. We strongly recommend you read *all* of the provided documentation to learn the full capabilities of your WorkHorse.

The WorkHorse Technical Manual includes the following sections:

- **Introduction**. This section is an overview of the WorkHorse system.
- **Installation**. Use this section to plan your installation requirements. This section includes specifications and dimensions for the WorkHorse (including outline installation drawings).
- **Maintenance**. This section covers WorkHorse maintenance. Use this section to make sure the WorkHorse is ready for a deployment.
- **Test**. Use this section to test the WorkHorse.
- **Troubleshooting**. This section includes a system overview and how to troubleshoot the WorkHorse. If the WorkHorse fails a built-in test or you cannot communicate with the system, use this section to help locate the problem.

The User's Guide includes:

- These guides (one for Mariner, Monitor, Rio Grande, and Sentinel models) contain information on how to use the WorkHorse hardware and software.

The Commands and Output Data Format Guide includes:

- This guide contains a reference for all commands and output data formats used by the WorkHorse. Use the *Command Quick Reference Card* to help remember the direct commands used by the WorkHorse.

The Documentation CD includes:

- The Documentation CD has Adobe Acrobat® Portable Document File (pdf) versions of all the user documentation. Use the electronic documentation to quickly search for information.

NOTE. When an addition or correction to the manual is needed, an Interim Change Notice (ICN) will be posted to our web site on the Customer Service page (www.rdinstrument.com). Please check our web site often.

1.2 Conventions Used in Manuals

Conventions used in the WorkHorse Technical Manual have been established to help you learn how to use the WorkHorse quickly and easily.

Windows menu items are printed in bold: **File** menu, **Collect Data**. Items that need to be typed by the user or keys to press will be shown as **<F1>**. If a key combination were joined with a plus sign (**<ALT+F>**), you would press and hold the first key while you press the second key. Words printed in italics include program names (*BBTalk*) and file names (*default.txt*).

Code or sample files are printed using a fixed font. Here is an example:

```
WorkHorse Broadband ADCP
RD INSTRUMENTS (c) 1997-2005
ALL RIGHTS RESERVED
Firmware Version 16.xx
>
```

You will find two other visual aids that help you: Notes and Cautions.

NOTE. This paragraph format indicates additional information that may help you avoid problems or that should be considered in using the described features.

CAUTION. This paragraph format warns the reader of hazardous procedures (for example, activities that may cause loss of data or damage to the WorkHorse).

1.3 WorkHorse Models and Options

The following section explains the different models and options available for WorkHorse ADCPs.

WorkHorse Monitor – The WorkHorse Monitor is designed to measure real-time current profiles from temporary or permanent mounting in the ocean, near-shore, harbors, and lakes. The Monitor ADCP system consists of an ADCP, cables, RS-232-to-RS-422 converter, and software. The Monitor system requires the addition of a Windows® compatible computer to collect data.

WorkHorse Sentinel – The WorkHorse Sentinel is designed for several-month autonomous current profile deployment from temporary or permanent mounting in the ocean, near-shore, harbors, and lakes. The Sentinel ADCP system consists of an ADCP, cables, battery pack, flash memory card, and software. Both battery capacity and memory can be increased with upgrades for longer deployments. The Sentinel can also be used for direct-reading current profile operation. The Sentinel system requires the addition of a Windows® compatible computer to configure the ADCP and replay collected data.

WorkHorse Rio Grande – The WorkHorse Rio Grande is designed to measure real-time current profiles from temporary or permanent mounting in a vessel. The Rio Grande ADCP system consists of an ADCP with Bottom Track mode, High Resolution Water Profiling modes, cables, and software. The input power requirements for the Rio Grande are +12 VDC. The Rio Grande system requires the addition of a Windows® compatible computer to collect data.

CAUTION. Do not attempt to attach a Workhorse Monitor/Sentinel I/O cable or power supply to the Workhorse Rio Grande ADCP. The Workhorse Monitor and Sentinel ADCPs are 20 to 50 VDC systems. **The Workhorse Rio Grande uses 12 VDC only.**

NOTE. The Rio Grande End-Cap is red to differentiate it from the Monitor and Sentinel ADCPs. Do not swap end-caps between a Rio Grande and a Monitor/Sentinel. The pin-outs are different on both the I/O cable connector and the internal I/O cable.

WorkHorse Mariner – The WorkHorse Mariner is designed to measure real-time current profiles from temporary or permanent mounting in a vessel. The Mariner ADCP system consists of a Monitor ADCP with Bottom Track mode, cables, Deck Box, Mounting Plate, and software. The Mariner system requires the addition of a Windows® compatible computer to collect data.

WorkHorse Options

- **Bottom Track** – You can use your WorkHorse ADCP from moving boats and ships with the Bottom Track Upgrade. Once the Bottom Track Upgrade is added, a WorkHorse ADCP can measure both water depth and boat velocity over the ground.
- **Shallow Water Bottom Track Mode 7** – You can use your WorkHorse 1200kHz ZedHed™ ADCP in water as shallow as 30cm.
- **High-Resolution Water Profiling Modes** – This upgrade allows you to collect water profiles using Water Modes 1, 5, 8, and 11.
- **High Ping Rate Water Mode** – This upgrade allows you to collect water profiles using Water Mode 12.
- **Waves** – This upgrade allows you to use the ADCP as a wave gauge.
- **External Batteries** – Adding external batteries can increase the deployment length for Sentinel ADCPs. Use an External Battery with a Monitor ADCP to provide backup power or for self-contained deployments.
- **High-Pressure Housing** – The standard WorkHorse housing allows deployment depths to 200 meters. High-pressure housings are available in depth rating of 500, 1000, 3000, and 6000 meters. See the "Outline Installation Drawings," page 159 for dimensions and weights.
- **Memory** – WorkHorse Sentinel ADCPs come standard with one memory card. Two PCMCIA memory card slots are available, with the total memory capacity not to exceed 2GB.
- **Spare boards kit** – Contains a complete set of spare printed circuit boards for a WorkHorse ADCP. The set does not include boards purchased as options such as the gyro/synchro board or the receiver board (not field replaceable).
- ***VmDas* Software** – Controls the ADCP and displays profile data through a personal computer.
- ***WinRiver* Software** – Controls the ADCP and displays discharge data and profile data through a personal computer.
- ***Waves* Software** – Controls the ADCP and displays waves data through a personal computer.

Mariner Options

- **Deck Box** – Converts AC power input or 12 VDC input into 48 VDC output for the Mariner input power. Converts computer RS232 to RS422. Option: converts gyro analog input to a serial NMEA output (requires an optional gyro interface; must be purchased at time of order).
- **Gyrocompass (Gyro) Interface** – Connects the ship's gyro to the Deck Box (must be purchased at time of order).
- **Mounting Plate** – A bronze plate that helps mount the transducer head to a vessel. See the "Outline Installation Drawings," page 159 for dimensions.

1.4 WorkHorse Care

This section contains a list of items you should be aware of every time you handle, use, or deploy your WorkHorse. *Please refer to this list often*.

1.4.1 General Handling Guidelines

- Never set the transducer on a hard or rough surface. **The urethane faces may be damaged.**
- Always remove the retaining strap on the underwater-connect cable and dummy plug when disconnecting them. **Failure to do so will break the retainer strap.**
- Do not apply any upward force on the end-cap connector as the I/O cable is being disconnected. **Stressing the connector may cause the ADCP to flood.** Read the Maintenance section for details on disconnecting the I/O cable.
- Do not expose the transducer faces to prolonged sunlight. **The urethane faces may develop cracks.** Cover the transducer faces on the WorkHorse if it will be exposed to sunlight.
- Do not expose the I/O connector to prolonged sunlight. **The plastic may become brittle.** Cover the connector on the WorkHorse if it will be exposed to sunlight.
- Do not store the ADCP in temperatures over 60 degrees C with the batteries removed. **The urethane faces may be damaged.** Check the temperature indicator inside the shipping case. It changes color if the temperature limit is exceeded.

- Store batteries in a **cool dry location** (0 to 21 degrees C). If the batteries are installed in the ADCP, do not store the ADCP in temperatures over 21 degrees C.
- Do not store batteries inside the ADCP for extended periods. **The batteries may leak.**
- Use batteries within one year. **Batteries stored for more than 12 months should NEVER be used!**
- Vent the system before opening by loosing the hardware on the housing. **If the ADCP flooded, there may be gas under pressure inside the housing.**
- Do not scratch or damage the O-ring surfaces or grooves. **If scratches or damage exists, they may provide a leakage path and cause the ADCP to flood.** Do not risk a deployment with damaged O-ring surfaces.
- Do not lift or support a WorkHorse by the external I/O cable. **The connector or cable will break.**

1.4.2 Assembly Guidelines

- Read the Maintenance section for details on WorkHorse re-assembly. Make sure the housing assembly O-ring stays in the groove when you re-assemble the WorkHorse. Tighten the hardware as specified. **Loose, missing, stripped hardware, or a damaged O-ring can cause the WorkHorse transducer to flood.**
- Place a light amount of DC-111 lubricant on the connector pins (rubber portion only). **This will make it easier to connect or remove the I/O cable and dummy plug.**
- Do not connect or disconnect the I/O cable with power applied. When you connect the cable with power applied, you may see a small spark. **The connector pins may become pitted and worn.**
- The **WorkHorse** I/O cable is *wet* mate-able, not *under water* mate-able.

1.4.3 Deployment Guidelines

- Read the WorkHorse User's Guide and the Software User's Guides. **These guides have tutorials to help you learn how to use the ADCP.**

- WorkHorse batteries are shipped inside the ADCP but not connected. **Connect the battery and seal** the ADCP before deployment.
- Align the compass whenever the recorder module is replaced, or when any ferrous metals are relocated inside or around the WorkHorse housing. **Ferro-magnetic materials affect the compass.**
- The AC power adapter is not designed to withstand water. **Use caution when using on decks in wet conditions.**
- Avoid using ferro-magnetic materials in the mounting fixtures or near the WorkHorse. **Ferro-magnetic materials affect the compass.**

1.5 System Overview

The WorkHorse ADCP system consists of an ADCP, cables, battery pack, flash memory card, and software. Both battery capacity and memory can be increased with upgrades for longer deployments. The WorkHorse can also be used for direct-reading current profile operation. They only require the addition of a Windows® compatible computer to configure the ADCP and replay collected data.

The transducer assembly contains the transducer ceramics and electronics. The standard acoustic frequency is 150kHz. See the outline drawing for dimensions and weights.

I/O Cable Connector – Input/Output (I/O) cable connects the WorkHorse ADCP to the computer and external power supply.

Beam-3 Mark – The Beam-3 mark shows the location of Beam-3 (Forward).

Urethane Faces – The urethane faces covers the transducer ceramics. Never set the transducer on a hard surface. The urethane faces may be damaged.

Housing – The standard WorkHorse housing allows deployment depths to 200 meters.

Thermistor – The Thermistor measures the water temperature.

Pressure Sensor – The pressure sensor (standard 200 Bar) measures water pressure (depth).

Transducer Head – The WorkHorse electronics and transducer ceramics are mounted to the transducer head. The numbers embossed on the edge of the transducer indicate the beam number. When assembling the unit, match the transducer beam number 3 with the Beam 3 mark on the end-cap.

End-Cap – The end-cap holds the I/O cable connector. When assembling the unit, match the Beam 3 mark on the end-cap with beam 3 number on the transducer.

Internal Battery Pack – The Sentinel ADCP includes an alkaline battery. The internal battery pack has 450 watt-hours (Wh) of usable energy at 0 C. When fresh, the voltage is +42 VDC. When depleted, the voltage drops to 30 VDC or less.

Flash Memory Card – WorkHorse Sentinel ADCPs come standard with one memory card. Two PCMCIA memory cards slots are available, with the total memory capacity not to exceed 2GB.

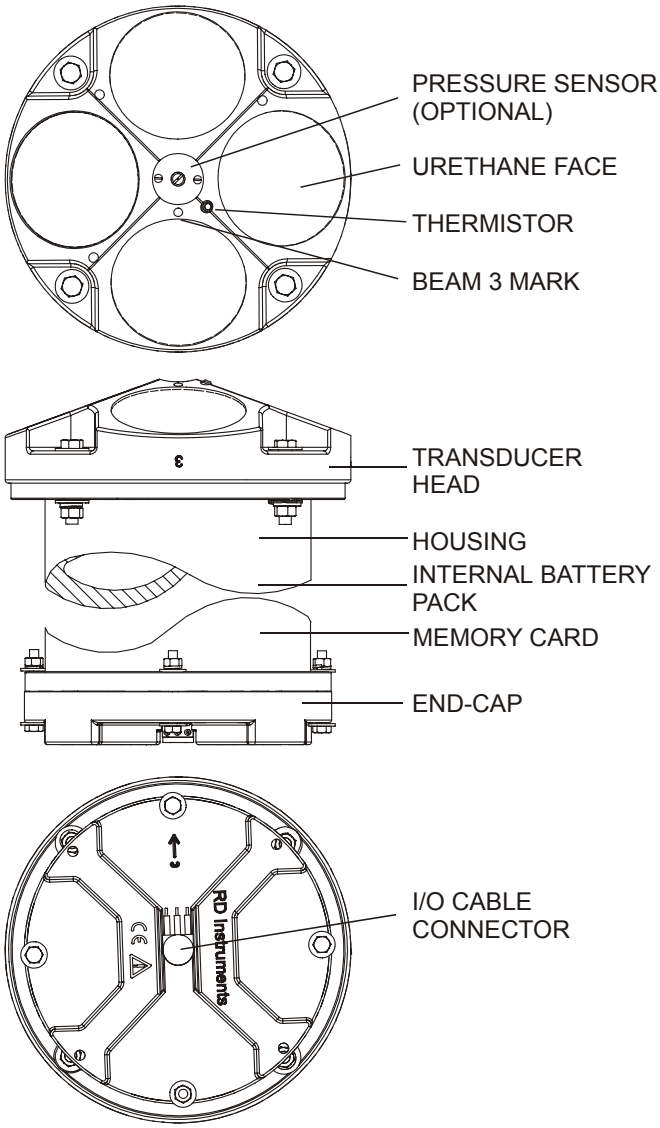

Figure 1. WorkHorse Sentinel ADCP Overview

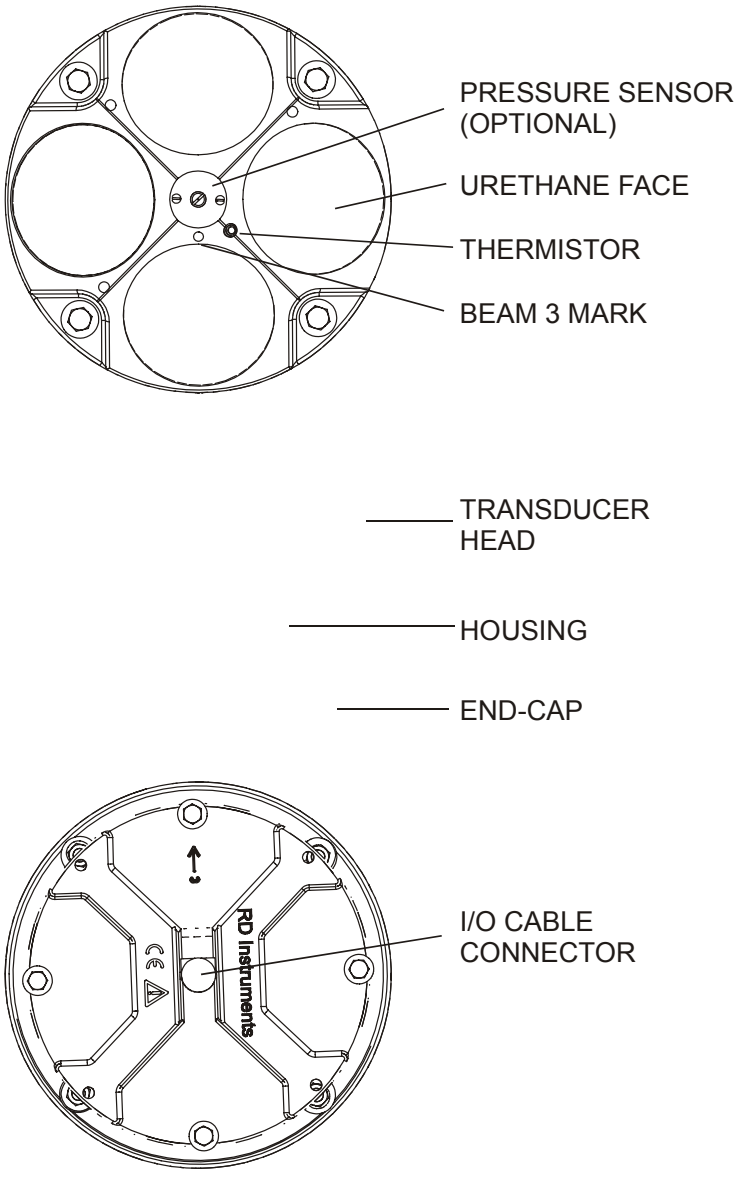
PRESSURE SENSOR
(OPTIONAL)
URETHANE FACE
THERMISTOR
BEAM 3 MARK
TRANSDUCER
HEAD
HOUSING
END-CAP
I/O CABLE
CONNECTOR
RD Instruments

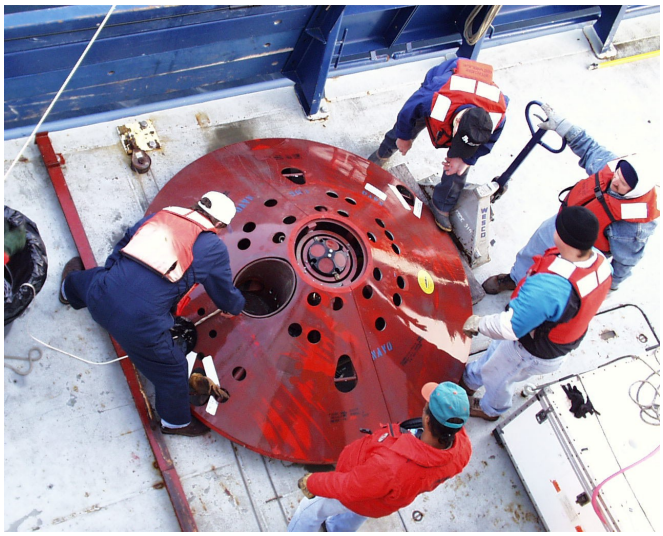

Figure 7. Trawl Resistant Bottom Mount

Photo courtesy of Maureen Wieler, Mooring Systems.

2.2 Buoy Mounts and Load Cages

Buoy mounts and load cage frames are designed to allow the Workhorse to profile unobstructed by the mooring hardware. Below is a sample of some the types of buoy and load cage mounts available for WorkHorse ADCPs.

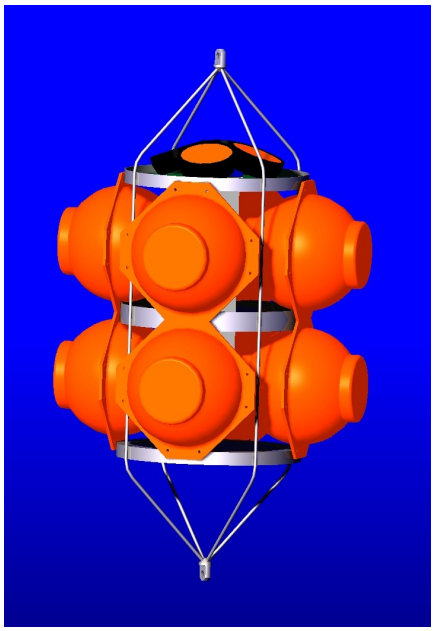

Figure 8. Deep-Water Mount

Photo courtesy of the Oceanscience Group.

Figure 9. Buoy Mount with External Battery

Photo courtesy of Maureen Wieler, Mooring Systems.

Figure 10. Subsurface Buoy

Photo courtesy of Patrick Lefeuvre, Technicap. The Subsurface buoy was developed by BMTI and Technicap.

Figure 11. Buoy Mount

Photo courtesy of Flotation Technologies.

Figure 12. Load Cage

Photo courtesy of Angela Cates, UNM.

2.3 Over-the-Side Mounting

The over-the-side mount is common if you want the ability to move the ADCP from one platform to another. You must make the mount as rigid as possible to limit the amount of pitch and roll applied to the ADCP. Although the tilt sensor can measure a ±20° influence, anything beyond 15° will cause bias to the data that cannot be removed. No matter what mounting type used, the ADCP must be below the bubble layer. Bubbles will cling to the urethane faces of the ADCP and reduce the range to almost nothing. Usually a mount somewhere aft of amidship is used. A stern mount will cause all sorts of problems due to propeller wake, bubbles, and turbulent water conditions.

NOTE. Avoid using ferro-magnetic materials in the mounting fixtures or near the ADCP. They affect the compass. Use 304 stainless steel for fresh water and 316 stainless steel for salt-water applications.

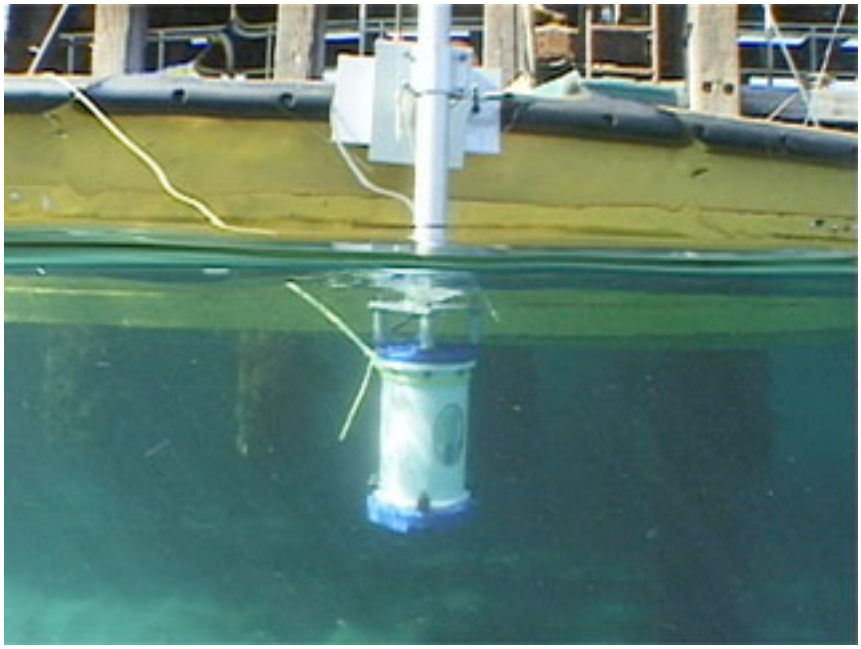

Figure 13. Over-the-Side Mount

Photo courtesy of John Skadberg, US Navy SPAWAR System Center in San Diego, CA. Sent to RDI by Steve Monismith.

2.3.1 Floating Objects

Our transducer assembly is sturdy, but we did not design it to withstand collisions with all floating objects. We strongly suggest you use the in-hull mount (see "In-Hull Mounting," page 17) if this is a possibility.

2.3.2 Example of an Over-the-Side Mount

When mounting the ADCP to a platform, use the following sequence.

- Test the ADCP
- Align the compass
- Mount to the platform (see Figure 14).

1. Hand winch with cable or rope.
2. Boat cleat to tie off the lower end of the channel.
3. Aluminum channel, 5" base x 2" high x 3/16" thick. You need to determine how long the channel needs to be as the drawing is not to any scale. The channel should be notched for the end-cap flange of the Housing Assembly. This will give the system a positive lock after the ADCP has been strapped to the channel.
4. Pivot housing - This could be a very heavy one-piece bent housing, or a three-piece assembly. Bolt the pivot housing to the deck of the boat (or buoy).
5. Nylon strap clamps - Two clamps are needed. Place some rubber or foam between the housing and the aluminum channel before clamping to protect the ADCP.

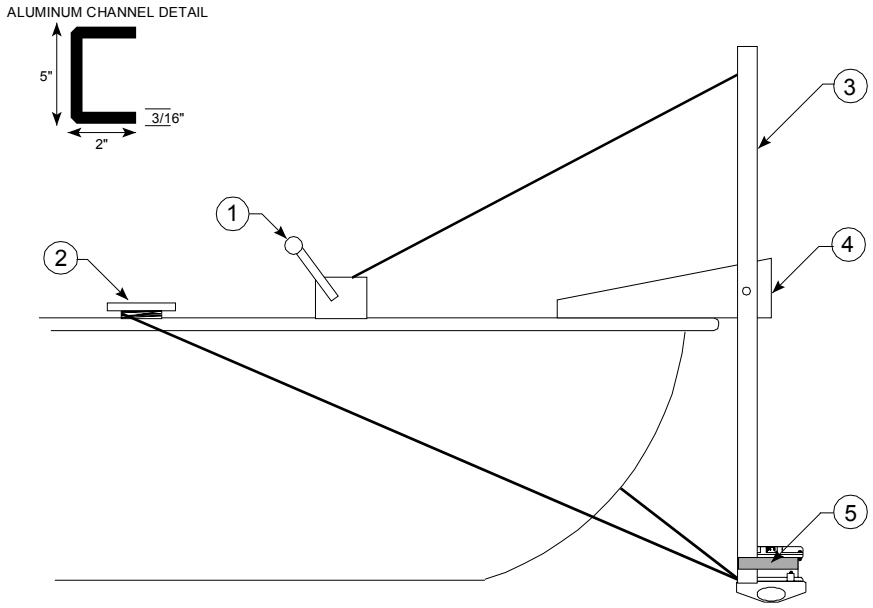

Figure 14. Mounting an ADCP to a Platform

2.3.3 Over-the-Side Mounting Special Considerations

Use the following suggestions when mounting the ADCP to a platform.

- It is desirable to rigidly mount the ADCP to the platform. You want to avoid the free spinning of the ADCP in this application. The ADCP must stay in the water at all times.
- The ADCP must be mounted deep enough so that turbulence caused by its movement through the water does not allow air bubbles to be attached to the transducer faces.
- Avoid mounting the ADCP near motors and thrusters. They cause air bubbles and will cause bias to the internal compass.
- Avoid mountings that will cause the ADCP to see severe accelerations.

2.4 In-Hull Mounting

The in-hull mounted ADCP is common when it is intended to keep the system on a single vessel or when over-the-side mounting is not practical for your vessel. For this type of mounting, there are issues of beam clearance and access.

2.4.1 Transducer Head Mounting Considerations

You must consider several potential problems before installing the transducer head assembly. Read this section before deciding where to install the transducer assembly. See the outline installation drawings for specifications on our standard ADCP transducer heads.

2.4.2 Location

Ideally, you want to install the transducer head:

- Where it is accessible both internally (for access to transducer electronics) and externally (to remove biofouling).
- Away from shipboard protrusions that reflect ADCP energy. Allow for a reflection-free clearance of 15° around each beam (see the outline installation drawings).
- Away from other acoustic/sonar devices, especially those operating at the same frequency (or harmonic) of the ADCP.
- Close to the ship's fore-to-aft centerline. As distance from the centerline increases, vertical accelerations caused by the roll of the ship also increase. These accelerations can cause additional uncertainties in ADCP velocity measurements.

Other considerations may be:

- Ease of installation.
- Portability (wanting to move the instrument from vessel to vessel).
- Permanent installation.

With all of these choices there are good and bad points. We will show you several options for installation and then go through specific concerns that you may have to deal with once you install or mount the ADCP.

2.4.3 Sea Chest In-Hull Mounting

A sea chest (Figure 15 and Figure 16, page 19) is a fixture that surrounds and holds the transducer head, protecting it from debris in the water. The bottom of the sea chest must be open to seawater to allow the acoustic beams to pass through freely. If using a sea chest interests you, call us for the latest information. Ask for Application Note 7 - Conceptual Design of a Sea Chest for an RDI ADCP Transducer (also available on our web site at www.rdinstruments.com).

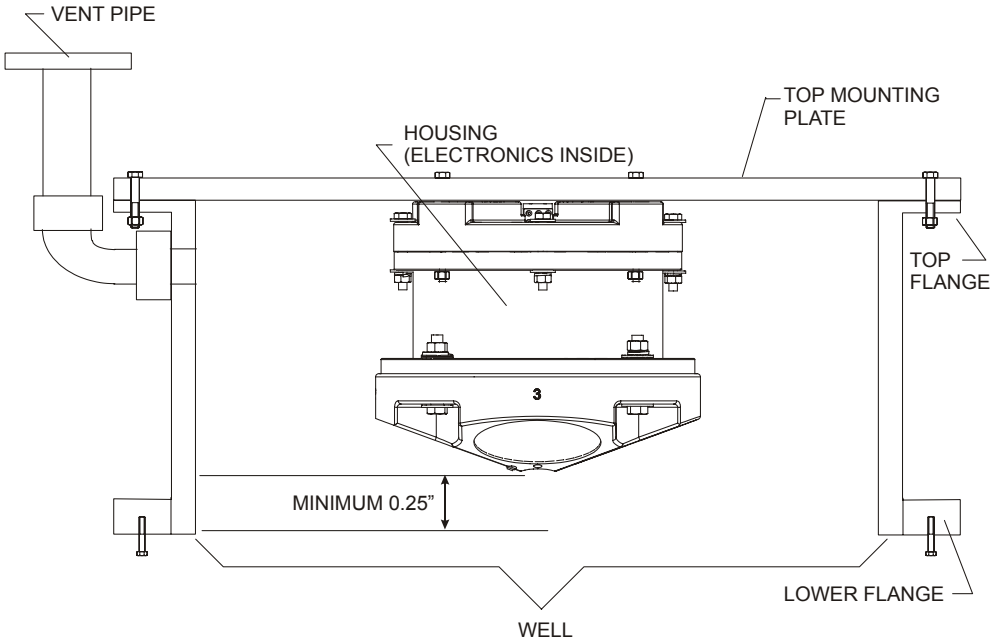

Figure 15. Sea Chest Mounted Transducer (Without an Adapter Plate)

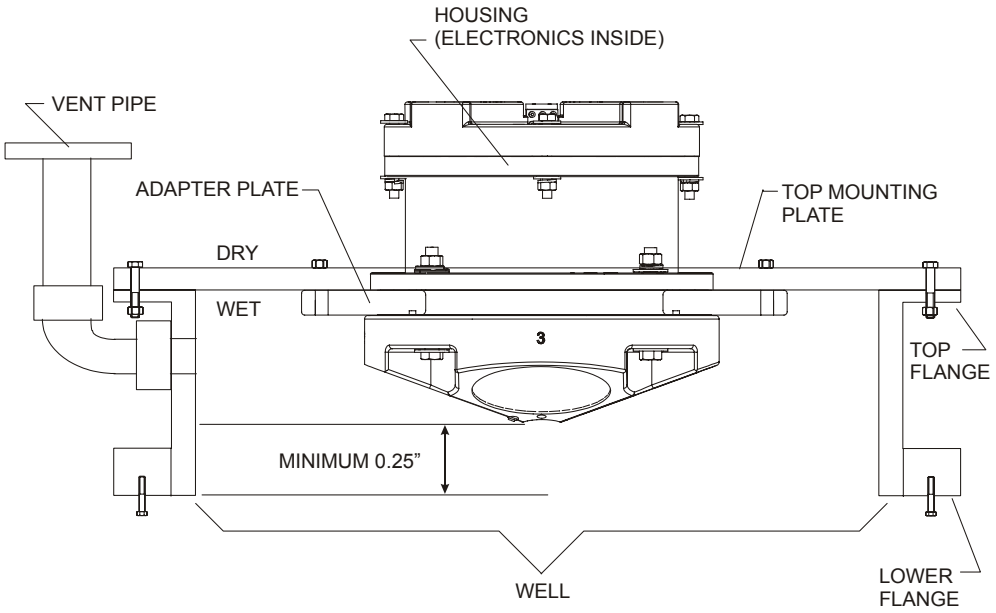

Figure 16. Sea Chest Mounted Transducer (With Mariner Adapter Plate)

NOTE. For instructions on how to install the Mariner Adapter Plate, see "Mariner Adapter Plate," page 50.

2.4.4 Mounting Considerations

Now that we have shown you the main methods of mounting the ADCP, you must be aware of issues that may cause reduction in range, biased data, fouling, and other performance related considerations.

Orientation

We recommend you mount the transducer head with Beam 3 rotated to a ship-relative angle of 45° (Figure 20, page 42 shows beam orientation). This causes the magnitude of the signal in each beam to be about the same. This improves error rejection, reduces the effect of ringing (see "Acoustic Isolation," page 25), and increases the ADCP's effective velocity range by a factor of 1.4. If you align Beam 3 at an angle other than zero, you must nullify this offset. You can do this using a direct command (see the Workhorse Technical Manual) or through our *VmDas* program.

Use the ship's roll and pitch reference to mount the transducer head as level as possible. If the head is not level, depth cell (bin) mapping will be incorrect. Large misalignments can cause large velocity measurement errors. If you cannot mechanically make the transducer head level, you can use *VmDas* to enter offset values for roll and pitch.

Fairing

A fairing is a structure that produces a smooth outline and reduces drag or water resistance. The fairing also diverts floating objects away from the transducer. A fairing that is shaped like a teardrop, slopped such that the leading edge (closer to the bow) is higher than the back edge, and extends below the hull (typically 12 inches) will divert the air bubbles away from the transducer faces.

Acoustic Window

While we do not fully understand windows, we do believe that windows can be used to produce overall performance improvements in vessel-mounted ADCPs. Additionally, if the ship operates where there is danger of barnacle damage or a high density of ice or other floating objects, then the use of an acoustic window is the only option.

It is theoretically possible to use a window successfully, however there are several advantages and disadvantages to consider before using an acoustic window.

Advantages

- Well will not fill with air bubbles caused by the ship moving through the surface water, see "Sea Chest In-Hull Mounting," page 18
- Flow noise is reduced, see "Flow Noise," page 24.
- The well can be filled with fresh water to limit corrosion.
- Barnacles can not grow on the transducer faces. Barnacle growth is the number one cause of failure of the transducer beams.
- The transducer is protected from debris floating in the water.

Disadvantages

- The range of the ADCP will be reduced because the window can and will absorb some of the transmit and receive energy.
- The transmit signal could be reflected into the well, causing the well to "ring" like a bell. This will cause the data being collected during the ringing to be biased. Some ships have reported a loss in range as great as 50 meters. The ringing may be dampened by applying sound absorbing material on the well walls (RDI does not have any recommendations for sound absorbing material), see "Ringing," page 24.
- The transmit signal could be reflected off the window and back into the other beams.

Our experience has allowed us to put together some minimum specific recommendations:

Window orientation. The acoustic window should be flat and parallel to the transducer mounting plate. Note this is not an absolute requirement. However, if the water temperatures inside the window and outside the window are not the same, all four beams will be refracted and actual velocity components will be rotated into a new coordinate system. In particular, some of the horizontal velocity will appear as a vertical velocity.

Window material. Important acoustic properties of the window include acoustic refractive index (which should be as close as possible to that of water), insertion loss (which should be as small as possible) and speed of sound. There are two acoustic refractive indices: one for shear waves and one for plane waves. The acoustic refractive indices are simply the ratios of speed of sound in water to speed of sounds in the material. Insertion loss combines absorption and reflection of sound, and it depends on both the thickness and the material properties of the window. In particular, you should avoid using window thickness equal to odd multiples of shear mode quarter-waves (Dubbelday and Rittenmeyer, 1987; Dubbleday, 1986). Refer to Selfridge (1985) and Thompson (1990) for more information. Note that the speeds of sound in plastics decrease with increasing temperature and that causes the resonant frequencies to shift. This can be a large effect. Neither Selfridge nor Thompson has much information on the temperature coefficients of sound speeds.

Our experience has shown that Polycarbonate windows are very good for the Ocean Surveyor/Observer (OS), WorkHorse (WH), and Broadband (BB) ADCPs. The thickness of the materials depends on the frequency you intend to use. Table 2 will help to choose the maximum thickness you should use.

NOTE. One concern with window selection is that it be able to support the weight of the water inside the well once the ship is dry-docked. RDI recommends that you always fill/drain the well at the same time that you are either filling/draining the dry dock area.

Table 2: Window Thickness

Frequency	Recommended Thickness	Maximum Thickness
75	1 inch	2 inches
300	0.5 inches	1 inch
600	0.25 inches	0.5 inches
1200	0.25 inches	0.5 inches

Spacing between window and transducer. The primary geometrical factor in design of windows is the reflection of one beam into another beam, causing crosstalk between the beams. The distance from the window should be at least 0.25 inches and no more than 0.5 inches for optimal setup.

Window aperture. The window aperture must be sufficient to pass the beams without causing diffraction. If the window is placed next to the transducer, then the aperture diameter should be the same as the distance between transducer cup corners. If the window is placed away from the transducer, then the aperture should be larger than all four beams plus about one transducer ceramic diameter.

Free Flow and Windows

If filling and draining the well is an issue, then you may want to use a window but allow the water to freely exchange from outside the well to inside the well.

Our Japanese representative uses 0.25 inch thick Low Density Polethylene (LDPE). He then drills two 30mm holes in the window along the edges. The inside walls are painted with anti-fouling paint. This allows the water to be full of anti-foulant during the time the ship is docked, which is when the barnacle growth occurs. The holes allow the water to exchange when the ship is in motion and allows for draining when the ship is dry-docked (a 0.25” window will not support the weight of the water). He has never had a failure with the window, and has seen only a minimal loss in range (5-30 meters).

It is best if the window is parallel to the bottom edge of the transducer cups. The transducer cups are at a 30° angle. If the window is at an angle to the transducer, it will change the absorption. We do not have experience with different angles, but we have had customers use domes or have the window follow the contour of the ship bottom without real problems.

The optimum distance for the bottom of the transducer assembly from the window is 0.25 inches ±0.125 inches. Never allow the transducer to touch the window. The farther away the transducer cups are from the window, the more the sound is reflected off of one beam and then reflected into another beam.

Acoustically-absorbing sea chest liner. A sound absorbing material should be used inside the sea chest to minimize the effects of sound ringing within the sea chest. The material should be a minimum of one wavelength thick (include the sound speed of the absorbing material when calculating the size of a wavelength). Approximate wavelengths of sound in seawater are given below in Table 3, page 23. We do not have sufficient experience to recommend a specific absorbing material.

Table 3: Wavelength of sound in seawater (1500 m/s sound speed)

FREQUENCY (kHz)	WAVELENGTH (mm)
75	20
300	5
600	2.5
1200	1.25

Fluid in the sea chest. The sea chest should be filled with fresh water. Seawater can be used, but at the cost of increased corrosion. Seawater should not be circulated through the sea chest because it will encourage growth of biofouling organisms. The pressure within the sea chest should be adjusted to keep the window from bowing in and out, and thereafter, the volume should be kept constant.

Transducer calibration. The factor used to correct velocity for speed of sound variations should be based on the speed of sound of the fluid inside the sea chest. Changes of speed of sound resulting from temperature changes may be computed from the temperature sensor on the transducer.

Air Bubbles

Design your installation to minimize the volume of air bubbles in the path of the acoustic beams. Air bubbles attenuate (weaken) the signal strength and reduce the ADCP profiling range. Ships with a deep draft or a non-flat bottom have fewer problems with bubbles. Ways to reduce bubble flow vary with ship characteristics, but two options are available. Mount the transducers below or away from the bubble layer.

- The flow layer is usually within the first two feet below the hull. Bubbles can get trapped in this layer. Mounting the transducer head amidship on the fore-to-aft centerline may help. For ships with propulsion systems that make large amounts of bubbles, use a mounting technique that lets you lower the transducer head below the hull while underway.

NOTE. If you use locally made or existing extension hardware instead of the hardware available from RDI, you may need to make an adapter plate to connect your hardware to our transducer head. Please call us for the exact dimensions and layout of our transducer head bolt holes for your system.

- Divert the bubble layer so it flows around the transducers - You can use fairings to alter the bubble flow. An acoustic window (see "Acoustic Window," page 20) may help reduce the bubble problem, but can cause ringing (see "Acoustic Isolation," page 25) and attenuation problems.

Flow Noise

Water flowing over the transducer faces increases the acoustic noise level, which decreases the profiling range of the ADCP. You can reduce the flow across the transducer faces with a sea chest, fairing, or acoustic window.

Corrosion and Cathodic Disbondment

Your ADCP is made of plastic and uses titanium bolts. The adapter plate (if used) may be naval bronze, aluminum, or other materials. Although the plastic ADCP will not corrode, the bolts and adapter plate may corrode.

Never attach anodes directly to the transducer head. Standard anode protection used for the ship should be installed outside of the well of the transducer head. Mounting of ship's standard anode protection outside of the transducer well will typically protect the parts that may corrode. However, you should plan regular inspections of mounting hardware and the adapter plate for signs of corrosion. Replace and parts that are questionable (corrosion can be further reduced if the well is covered with a window and then filled with fresh water).

Ringing

The ADCP transmits an acoustic pulse into the water. The main lobe of this pulse bounces off particles in the water and the signals returned from these particles are used to calculate the velocity of the water.

As stated, the main lobe of the transmitted pulse is what we are using to process and calculate a velocity. The transmitted pulse, however, is made up of many side lobes off the main lobe. These side lobes will come in contact with metal of the transducer beam itself and other items in either the water or the well.

The energy from the side lobes will excite the metal of the transducer and anything bolted to the transducer. This causes the transducer and anything attached to it to resonate at the system's transmit frequency. We refer to this as "ringing."

If the ADCP is in its receive mode while the transducer is ringing then it will receive both the return signals from the water and the "ringing." Both of these signals are then processed by the ADCP. The ringing causes bias to the velocity data.

All ADCPs "ring" for some amount of time. Therefore, each ADCP requires a blanking period (time of no data processing) to keep from processing the ringing energy. Each ADCP frequency has a different typical ringing duration. The typical ringing period for each ADCP frequency is as follows; 75kHz is 8 meters, 300kHz ADCPs is 2 meters, 600kHz ADCPs is 1.5 meters, and 1200kHz ADCPs is 0.8 meters. These typical ringing values

are recommended as the minimum setting for all ADCPs using default set-ups.

It should be noted, on some installations the effects of ringing will last longer than the recommended settings above. For example, the effects of ringing will last longer if the transmit signal becomes trapped inside the transducer well. This can occur because the well itself is ringing with the transducer or when windows covering the opening of the well reflect the signal back inside the well.

The window causes the transmit signal to reflect back into the well due to the difference in impedance between the window and the water. When the transmit signal is reflected in the well it becomes trapped and this results in longer ringing periods. To keep from processing this signal, the blanking period must be increased.

Lining the inside walls of the well with a sound absorbing material aid in dampening the ringing effect.

Acoustic Isolation

Try to minimize the acoustic coupling between the transducer head and the ship. Without adequate acoustic isolation, the transducer output will "ring" throughout the ship and feeds back into the ADCP receive circuits. Ringing causes bias errors in water-track velocities and results in the loss of data in the closest depth cells (bins). Reflections inside a sea chest with an acoustic window also can cause ringing.

You can attain acoustic isolation several ways. At a minimum, use gaskets to isolate all contact points between the ship and the transducer head. Design your installation for:

- A minimum number of contact points between the transducer head and the ship.
- Minimal contact area.
- Single points of contact for positioning and support (when possible).

You also should try to separate the transducer head from the ship using intermediate connections. This is because direct connections transfer the most acoustic energy. Texas A & M used the following installation technique and had minimal ringing problems.

- Transducer mounted to a thin steel plate
- Steel plate positioned with three pins set into mounting holes on the hull; pins isolated with gaskets
- Steel plate held in place with four I-beams welded to a frame

- Frame bolted to another frame and separated by gaskets
- Second frame bolted to the ship and separated by gaskets

Acoustic isolation from other acoustic devices on the ship is also necessary. You can do this using the following techniques.

- Mount the other acoustic devices as far apart as possible.
- Make sure neither the main lobes nor the side lobes of the acoustic devices point at the transducers, including acoustic reflections.
- Try not to operate devices that use the same frequency or a harmonic of the ADCP's frequency.

Maintenance

"Maintenance," page 43 explains routine maintenance procedures. You rarely need access to the electronics inside the transducer head. However, one external maintenance item is important enough to mention here as it may affect how you install the transducer head.

Objects deployed within about 100 meters (328 feet) of the surface are subject to the buildup of organic sea life (biofouling). This means WorkHorse ADCPs are subject to biofouling. Soft-bodied organisms usually cause no problems, but hard barnacle shells can cut through the urethane transducer face causing transducer failure and leakage into the ADCP (see Figure 17).

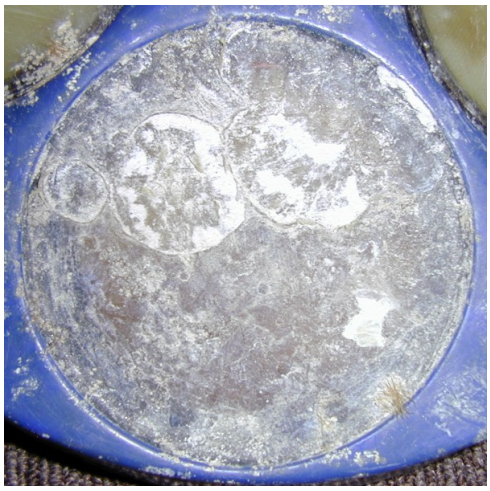

Figure 17. Barnacle Damage to Urethane Face

The best-known way to control biofouling is cleaning the ADCP transducer faces often. However, in many cases this is not possible. The other alternatives include the use of a window or some sort of anti-foulant protection.

Some of our users have had success applying a thin coat (≈4 mm; ≈0.16 in.) of either a 50:50 mix of chili powder and Vaseline or chili powder and silicone grease to the transducer faces. The chili powder should be the hottest that can be found. Water flowing across the transducers will wash this mix away over time. The silicone mixture tends to last longer.

Some organizations may decide to use antifouling grease. However, most antifouling greases are toxic and may cause problems. Recent tests suggest antifouling grease may cause the urethane on the transducer faces to develop cracks. Warmer temperatures accelerate this effect.

The other method is to use antifoulant paint. At present, we recommend the following antifouling paint manufacturer and paint brand: Courtalds Finishes Interlux brand paints, US Telephone: 908-686-1300, Web Page: www.interlux.com.

CAUTION.

1. Read the Material Safety Date Sheet before using any of the listed solvents and paints.
2. Some antifouling coatings may not be legal for use in all areas. Check with your local environmental agency before using the antifouling paint.
3. Do not arbitrarily use antifouling paints. Be aware that antifouling paints can accelerate the dezincification corrosion of brass. Once initiated, dezincificatioin will rapidly destroy the brass.
4. RDI no longer recommends the use of Nopcocide for the prevention of biofouling. If using antifouling grease, remove it immediately after recovering the ADCP.
5. Antifouling grease is toxic. Read the product safety data sheet before using the grease. Wear gloves and a face shield when applying the grease. If the skin comes in contact with the grease, immediately wash the affected area with warm, soapy water.
6. When possible, do not coat the transducer faces with cuprous oxide or related paints that contain chemicals such as copper, chrome, or arsenic. These paints advance the corrosion of the transducer assembly and will cause the urethane to separate from the transducer cups.
7. All US Coastal States prohibit the use of tributyl-tins on boat hulls. The European Economic Commission has released a draft directive that would prohibit the use of many organo-tins after July 1989. We strongly recommend you obey your local laws.

Mariner Deck Box Mounting Considerations

Place the Mariner Deck Box (see "Outline Installation Drawings," page 159) where there is access to the I/O cable, host computer, gyro interface cable, and navigation interface cable. The chassis needs an input voltage of

90 to 260 VAC or 12 VDC to operate (see "Power Considerations," page 38). Allow enough room around the Deck Box for access, ventilation, and isolation from electronic and magnetic interference.

2.4.5 Cabling Considerations

Several cables connect to the ADCP system (see Figure 18). Use care when routing these cables through bulkheads, deck plates, cable runs, and water-tight spaces. Make allowances in cable length and engineering design plans for cable routing. When necessary, use strain reliefs on the cables.

The input/output (I/O) cable connects the transducer head to the deck box (Mariner systems) or computer. We deliver the cable with both connectors attached. The transducer-end connector is molded on, so you can use it below the waterline. The cable is custom-made in lengths specified by the user. Route this cable so:

- You can install it with the connectors attached.

NOTE. You can order the cable with the chassis-end connector removed. This allows easier cable routing, but requires you to solder the cable connections at your installation site. This is a difficult task.

- It does not have kinks or sharp bends.
- You can easily replace it if it fails.
- The dry-end connector OD is 5.02cm (1.530 inches) and is 3.89cm (1.976 inches) long. Model# Souriau 85106RC2024P50.
- The wet-end connector is 3.0cm (1.18 inches) long, 2.54cm (1.00 inches) wide, 1.27cm (0.5 inches) high. Model# Impluse LPMIL-7-FS.

Other cables that may need routing to the chassis include the computer interface, the navigation interface, and the gyro interface.

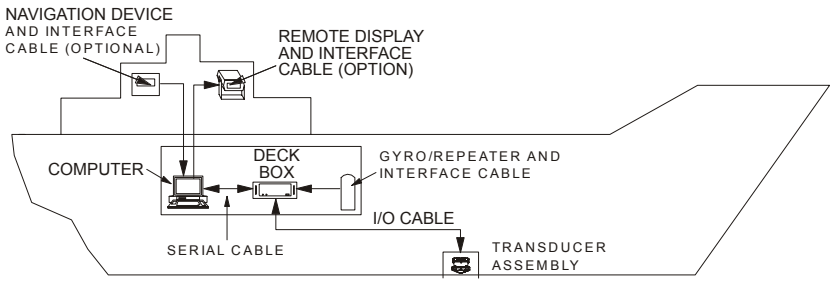

Figure 18. Typical Mariner Interface Cable Layout (Overview)

NOTE. See the appropriate ADCP User's Guide for a detailed view of the cable connections.

2.5 Computer Considerations

We designed the WorkHorse ADCP to use a Windows® compatible computer. The computer controls the ADCP and displays its data, usually through our *WinSC*, *WinADCP*, *VmDas* or *WinRiver* programs. Table 4 lists the minimum computer requirements.

NOTE. It is highly recommended that you download and install all of the critical updates, recommended updates, and the service releases for the version of Windows® that you are using prior to installing any RDI software.

Table 4: Minimum Computer Hardware Requirements

Windows® XP, Windows® 2000, Windows® NT 4.0 with Service Pack 4 installed, Windows® 98, or Windows® 95 (see note below)
Pentium class PC 233 MHz (350 MHz or higher recommended)
32 megabytes of RAM (64 MB RAM recommended)
6 MB Free Disk Space (20 MB recommended)
One Serial Comport (two or more High Speed UART Serial Comports recommended)
Minimum display resolution of 800 x 600, 256 color (1280 x 760 High Color recommended)

NOTE. VmDas has special requirements – see the VmDas User's Guide for detailed information on system requirements.

The computer configuration varies depending of the number of communication ports and the external data refresh rate. Serial communications require a lot of processor resources, and the minimum requirements can vary. A good quality video card is required to operate *VmDas* and *WinADCP* simultaneously. We do not use graphic card 3D functions, however, video memory is needed to display all graphics.

However, with experience we can recommend that:

- If you are using more than two communication ports, you should not use a Celeron processor.
- Intel Pentium III processors work best to operate the ADCP and give access to the display and keyboard without losing ensembles.

2.6 Gyrocompass Interface Considerations

NOTE. The Gyrocompass Interface is available only for Mariner ADCPs using the Deck Box. If you are using a NMEA external device, see "Navigation Interface Considerations," page 38.

There are two ways to interface sensor data such as heading, pitch, and roll information with the ADCP data, either by analog signal input or by a serial ASCII input.

- Single- or multi-turn synchro heading outputs and single-turn synchro tilt sensor outputs for pitch and roll or
- Stepper heading outputs and single-turn synchro tilt sensor outputs for pitch and roll.
- Serial ASCII data input to the host computer running the RDI ADCP software that conforms to one of the following NMEA standards.
- $_ _ HDT (NMEA 0183 standard of true heading only)
- $_ _ HDG (NMEA 0183 standard of magnetic heading only)
- $PRDID (RDI proprietary NMEA string supporting heading, pitch, and roll)

The analog input is read by the Gyro Interface board in the Mariner Deck Box, and converted to a serial NMEA string to be used by the *VmDas* program at one of the COM ports. The advantage to these options is that gyro outputs can be used on vessels where flux-gate heading sensors and pendulums cannot. This is due to the effects from the hull on a flux gate compass and the accelerations of the ship on pendulum pitch and roll sensors. Table 5, page 31 lists the gyro interface options.

Use the RD-SIC-0 option when only stepper heading is available. Use the RD-SIC-1 option when either synchro or stepper heading is available. This option supports single-turn (1:1), multi-turn (36:1, 90:1, 360:1), and stepper voltage outputs from a ship's gyro or portable gyro. Use the RD-SIC-3 option with a gyro capable of resolving motion across the vertical plane (i.e., tilt synchro gyro). With the RD-SIC-3 option, you can use:

The Gyro Interface board uses up to three synchro-to-digital converter chips, a resistor network is used to configure the board for the input synchro stator voltages, and a DIP switch is used to configure the board for the turns ratio of a specific gyro. The Gyro Interface board supports a wide range of input synchro frequencies (50, 60, and 400 Hz).

We usually configure the Gyro Interface board at the factory to customer specifications for synchro stator voltage and gyro turns ratio. Table 6, page 31 lists the acceptable standard configurations. For us to configure the board you must provide us with either the Stepper

Sometimes, though, the customer chooses to use a gyro other than the one originally specified. Because of the need to change the gyro interface configuration "in the field," we provide technical information below.

Table 5: Gyro Interface Options by Model

Inputs allowed	Natel chips	Typical use
1 (RD-SIC-0)	0	Stepper heading only
1 (RD-SIC-1)	1	Synchro/Stepper heading only
3 (RD-SIC-3)	3	Synchro/Stepper heading, AND Synchro-only pitch and roll

Table 6: Acceptable Gyro Interface Configurations

Gyro Heading Input (Synchro)	
Frequency Input	50Hz, 60Hz, or 400Hz
Stator Voltages	Through a variable scaling resistor package, the stator voltage can vary. Starting with a minimum voltage of 11.6 volts RMS, the most common voltages are 11.8, 26, 50, and 90 volts RMS.
Reference Voltages	20 to 150 VAC
Turns Ratios supported	Through a selectable DIP switch, the turns ratio can be 1:1, 36:1, 90:1, and 360:1
Gyro Heading Input (Stepper)	
Input Voltages	Most common ranges are from 35 to 70 VDC, with a positive or negative common. On special request, other voltages may be possible.
Stepper Ratio	Only a 6-step gyro can be used, where each step stands for 1/6 of a degree. See table below. ST0 ST1 ST2 DEGREE 1 1 0 (0/6) 0.000 1 0 0 (1/6) 0.167 1 0 1 (2/6) 0.333 0 0 1 (3/6) 0.500 0 1 1 (4/6) 0.667 0 1 0 (5/6) 0.833
Gyro Tilt Input (Synchro Only)	
Input Frequency	50Hz, 60Hz, or 400Hz
Stator Voltages	Through a variable scaling resistor package, the stator voltage can vary. Starting with a minimum voltage of 11.6 volts RMS, the most common voltages are 11.8, 26, 50, and 90 volts RMS.
Reference Voltages	20 to 150 VAC
Turns Ratio	1:1 only
Output Types (ASCII Only)	
Baud Rate	9600
Parity	None
Data Bits	8
Stop Bits	1
String Format	$PRDID,±PPP.PP, ±RRR.RR,HHH.HH (where P is for pitch, R is for roll, H is for heading. All are in decimal degrees.

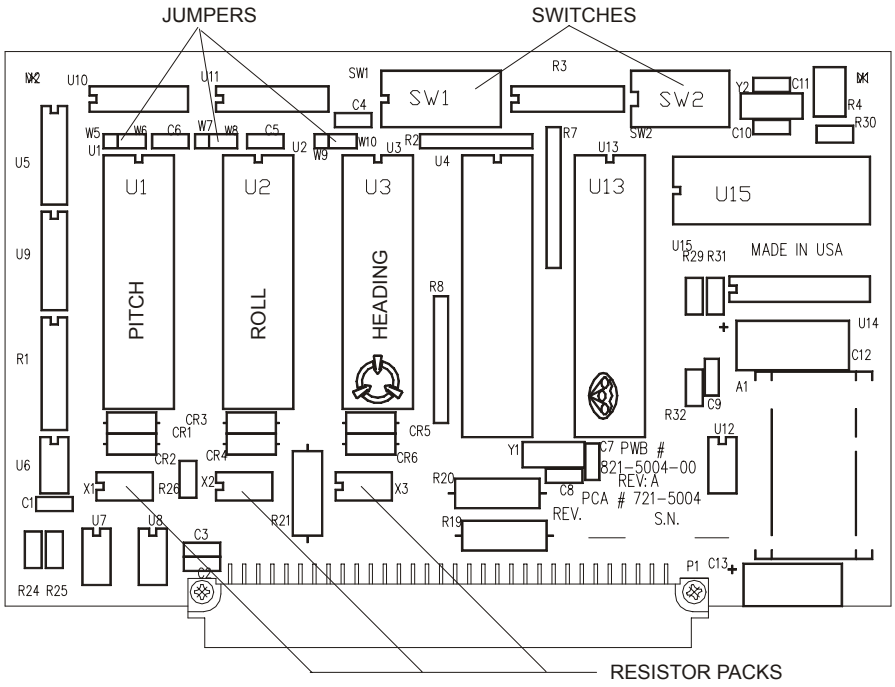

Figure 19. Gyro Interface Board

2.6.1 Determining the Synchro Stator Voltage

The best way to find the synchro stator voltage is to use the value listed in the gyro manual. If the manual does not list this value, you can determine the stator voltage by using an AC voltmeter and doing some calculations. After finding the stator voltage requirements, you will install one or more scaling-resistor packs on the Gyro Interface board. If you already know the stator voltage requirements, skip the rest of this section and go to "Determining the Size of the Scaling-Resistor Pack," page 33 to find the size of the scaling-resistor pack.

a. With the gyro synchro at a constant angle, measure the AC voltage across the following sets of leads. You must maintain this constant angle during your readings.

   1. S1 to S2:_____ VAC = S_{12}
   2. S2 to S3:_____ VAC = S_{23}
   3. S3 to S1:_____ VAC = S_{31}

b. Calculate the RMS stator voltage, V_S:

$$V_S = \left[\frac{S_{12}^2 + S_{23}^2 + S_{31}^2}{1.5} \right]^{1/2} = \textit{RMS stator voltage}$$

Usually, V_S will be a common stator voltage (11.8, 26.0, 50.0, or 90.0). If V_S is about equal to one of these values, you can probably assume your gyro is using a common value. If you are unsure of your readings, retake them at a different gyro angle and re-compute V_S. If you know your gyro is using an *uncommon* stator voltage value, you can still modify the scaling-resistor pack value for use with the Gyro Interface board (see "Determining the Size of the Scaling-Resistor Pack," page 33).

Verify the synchro stator voltages are within acceptable limits.

Each stator-pair voltage (S_{12}, S_{23}, and S_{31}) must be less than or equal to V_S.

All pairs of synchro stator voltages must be within the limits given below. For example, the check for one such pair is

$$0.7071 \leq \frac{(S_{12}^2 + S_{23}^2)^{1/2}}{V_S} \leq 1.2247$$

If these voltage checks are not within acceptable limits, then the synchro output is bad, the voltage measurements were incorrect, or the synchro angle was not constant during readings.

2.6.2 Determining the Size of the Scaling-Resistor Pack

As explained earlier, most synchros use one of the standard synchro stator voltages (V_S) listed in Table 7. The Gyro Interface board will work with any of these voltages by using the associated scaling-resistor pack to adjust the stator voltage input rating to 11.8 VAC.

Table 7: Standard Synchro Stator Voltages and Scaling Resistance

Common synchro stator reference voltages	Scaling resistance
11.8 VAC	0.0 kΩ (jumper)
26.0 VAC	39.2 kΩ, 1/8 W
50.0 VAC	100.0 kΩ, 1/8 W
90.0 VAC	221.0 kΩ, 1/8 W

If the gyro is using non-standard stator voltages, you can find the scaling resistance with the following equation.

$$R = (V_S - 11.8\ VAC) \times (2.76\ k\Omega)$$

The tolerance for this can be as large as 10%, but the four resistors in the scaling-resistor pack must be within 0.1% *of one another*. For example, the exact scaling-resistance value for a V_S of 50.0 VAC is 105.4 kΩ. However, resistor values of 100 kΩ are more common. Because this value is within

10% of the calculated value, you can use four 100-kΩ resistors for the scaling-resistor pack if they are within 0.1% of one another.

CAUTION. If you configure the gyro interface board for a lower voltage than the actual synchro stator voltage, you could damage the board or the ADCP.

2.6.3 Installing the Scaling-Resistor Pack and W-Jumpers

After calculating the size of the scaling-resistor pack, you are ready to install the pack on the Gyro Interface board (Figure 19, page 32). Before you can install the scaling-resistor pack, you may have to change the resistors now in the pack. To do so, pull the resistor pack out of its socket on the Gyro Interface board, unsolder the old resistors, and install the new resistors. When the scaling-resistor pack has the correct resistors soldered in place, re-install the pack in its socket. Also, make sure the appropriate W-jumpers are installed. Table 8 lists the associated resistor sockets and W-jumpers.

Table 8: Natel Chip, Resistor Pack, and W-jumper Sockets

Function	Natel chip socket	Resistor pack socket	W-jumper socket
Pitch	U1	X1	W5
Roll	U2	X2	W7
Heading	U3	X3	W9

2.6.4 Determining and Setting the Synchro Turns Ratio

The best way to find the synchro turns ratio is to use the value listed in the gyro manual. If the manual does not list this value, you may have to experiment by trying the various settings on the Gyro Interface board. Table 9, page 35 lists the available turns ratios and their switch settings. To set the turns ratio, set the poles of switch S1 on the Gyro Interface board (Figure 19, page 32) to the appropriate position.

If you are guessing, try a 1:1 turns ratio first. The reason you want to use a 1:1 turns ratio is so you do not have to enter a heading bias (or initialization) value in any software program or adjustment on the front panel you are using. That is, whenever you use a *non-1:1 turns ratio* or a *stepper* voltage, it is possible for the Gyro Interface board to be out of alignment with the heading synchro. For example, if the ship's heading is 027° when you initialize the ADCP, the misalignment between the gyro and the Gyro Interface board will be 27°. When a misalignment condition occurs, you must account for the misalignment either by the front panel set Up/Down buttons, or in the software program you are using. You can use the EB-command (Heading Bias) to align the Gyro Interface board to the gyro if

you do not have the ability to initialize the WorkHorse ADCP through he front panel or in the software. Once set, the heading bias value is valid until you turn off the ADCP or gyro.

Table 9: Gyro Interface Switch 1 Settings

Turns ratio	P1	P2	P3	P4	P5	P6	P7	P8
1:1	C	O	C	O	O	C	C	C
36:1	C	O	C	O	O	O	C	C
90:1	C	O	C	O	O	C	O	C
360:1	C	O	C	O	O	O	O	C
Stepper enable	O	C	O	C	O	O	O	O

C = CLOSED O = OPEN

Table 10: Gyro Interface Switch 2 Settings

Pole	Setting	Function		
P1	C	Enables pitch and roll on the synchro board		
	O	Disabled pitch and roll on the synchro board		
P2-3	Baud rate	Baud rate	P2	P3
		2400	O	O
		4800	O	C
		9600	C	O
		19200	C	C
P4-5	Display rate	Display rate	P4	P5
		Continuous	O	O
		10 times per second	O	C
		2 times per second	C	O
		Once per second	C	C
P6	Not used			

2.6.5 Stepper Interface

If you are using a *stepper* voltage instead of a synchro voltage, remove the Synchro to Digital chip in socket U3 on the Gyro Interface board. Be sure to protect the Synchro to Digital chip from static discharge.

CAUTION. Synchro-to-Digital converter chips are **expensive**, so handle them with care.

Remember the following items when using the stepper interface

- Only a 6-step gyro can be used, where each step stands for 1/6 of a degree (see Table 6, page 31).

- If you are using roll and pitch inputs from a vertical gyro, the turns ratios for these inputs ***must*** be 1:1.
- Most common stepper voltage ranges are from 35 to 70 VDC, with a positive or negative common and this is what the gyro interface board is setup for from the factory. On special request, other voltages may be possible. The gyro Interface board uses resistors R19, R20, and R21 to set the current for the opto isolators on the stepper interface. Use Table 11 to determine the correct value of these resistors.

Table 11: Stepper Interface Resistor Values

Stepper Voltage	Resistor Value	Watt
35 to 70 VDC	8.2kΩ	1
20 to 35 VDC	4.0kΩ	1
70 to 110 VDC	16.0KΩ	2

2.6.6 Testing the Gyro Interface

You can use the front LCD display on the Deck Box to test the gyro interface. Turn on the Deck Box. If the LCD heading readout agrees with the gyro at several angles, you can assume the settings are correct. You also should have the gyro make a complete turn through 360°. Some lag may appear, but the LCD readout should change smoothly and in the same direction as the gyro.

If you do *not* have a 1:1 turns-ratio synchro input, and the LCD readout follows in the same direction but with a constant offset from the gyro value, you must use the initializing ↑, ↓, and SET buttons on the front of the deck box. if you do not have the initializing buttons, then you can set the offset in the *VmDas* Transforms page. If you are not using RDI's *VmDas* program you can set the offset through the EB-command. This entry will align the two values when properly set, or one of two problems can exist.

- Incorrect turns-ratio value - If you are *not* sure of the turns ratio, try selecting the other turns-ratio values and retest the configuration.

CAUTION. Be sure to power down the Deck Box *before* changing the switch settings. You also should secure the gyro signals to the Deck Box, as these signals are still "live" at the Gyro Interface board terminals.

- Incorrect wiring hookup to gyro - If you *are* sure of the turns-ratio (i.e., found in gyro manual), the problem must be incorrect wiring. That is, the stator lines (S1, S2, S3) or reference lines (RH, RL) may be connected to the wrong gyro

terminals. Use Table 12 or systematically swap pairs of stator or reference leads to correct wiring problems.

Table 12: Gyro Interface Troubleshooting Guide

"A" Gyro angle	"B" Angle displayed by heading readout (Shaded areas indicate reverse rotation)											
000	000	120	240	240	000	120	180	300	060	060	180	300
060	060	180	300	180	300	060	240	000	120	000	120	240
120	120	240	000	120	240	000	300	060	180	300	060	180
180	180	300	060	060	180	300	000	120	240	240	000	120
240	240	000	120	000	120	240	060	180	300	180	300	060
300	300	060	180	300	060	180	120	240	000	120	240	000
Gyro conn.	"C" Possible ADCP Connector Configurations											
	1	2	3	4	5	6	7	8	9	10	11	12
RH	RH	RH	RH	RH	RH	RH	RL	RL	RL	RL	RL	RL
RL	RL	RL	RL	RL	RL	RL	RH	RH	RH	RH	RH	RH
S1	S1	S2	S3	S2	S3	S1	S1	S2	S3	S2	S3	S1
S2	S2	S3	S1	S1	S2	S3	S2	S3	S1	S1	S2	S3
S3	S3	S1	S2	S3	S1	S2	S3	S1	S2	S3	S1	S2

NOTE

1. With a gyro angle of "a," the heading readout will show an angle of "b" if the gyro interface cable wires are connected as shown in "c." For example - if the gyro is at an angle of 120° ("a"), and the heading readout is showing a value of 300° ("b"), the interface is wired in either configuration #7 or #10 ("c"). If the heading readings rotate in the same direction as the gyro, the interface is wired as #7; if the rotation is in the reverse direction, the interface is wired as #10.
2. As shown above, only configuration #1 in "c" is correct for gyro interface wiring.
3. Configurations 7-12 occurs when reference wires RH and RL are reversed, producing errors of 180°.
4. Configurations 2, 3, 8, and 9 occur when the S1-S2-S3 wires are rotated, producing errors of 120°.
5. Switching any two of the S1-S2-S3 wires, as in configurations 4, 5, 6, 10, 11, and 12 (shaded in table), cause synchro rotation to be reversed and result in errors of varying degrees.
6. Setting the gyro to 000° will produce an offset that is a multiple of 60° for all possible wiring configurations.
7. Leaving any of the S1-S2-S3 connections "open" will give unpredictable results.

2.7 Navigation Interface Considerations

VmDas can read in, decode, and record ensembles from an ADCP and NMEA data from some specific (i.e. GPS and attitude sensors) external devices. *VmDas* stores this data in both raw data files (leaving all original data input in its original format) and in a combined, averaged data file. *VmDas* uses all of this data to create different displays for the user.

VmDas looks for, and utilizes the following strings if transmitted: standard GGA (position), HDG/HDT (Heading), VTG (speed and track) messages, and a proprietary PRDID (pitch and roll) message.

As well as being able to input NMEA strings to *VmDas*, it can produce NMEA output strings of speed log information. The speed log contains VDVBW (ground/water speed) and VDDBT (depth).

NOTE. For more information about NMEA data, see the *VmDas* and *WinRiver* User's Guides.

2.8 Power Considerations

Use the following sections to determine the power requirements for your ADCP system. All Workhorse tests and operations work equally well using any of the listed power sources.

2.8.1 Monitor/Sentinel Power Considerations

WorkHorse Monitor and Sentinel ADCPs require +20 to 50 VDC to operate. The standard AC Adapter runs on any standard AC power and supplies +48 VDC to run the Workhorse when the batteries are not connected. The Sentinel's internal battery supplies +42 VDC.

NOTE. The AC Adapter input voltage is sufficient to override the internal battery voltage (i.e. the ADCP will draw all power from the AC adapter even if the battery is installed and connected).

Transmitted power increases or decreases depending on the input voltage (within the voltage range of 20 to 50 VDC). A fresh battery provides +42 VDC. Batteries spend most of their life at a nominal voltage of +33 VDC.

NOTE. The transmitted power is decreased 1 DB if the input voltage drops from 42 VDC to 33 VDC. For a 300kHz WorkHorse ADCP, each DB will result in a decrease in range of one default depth cell.

2.8.2 Rio Grande Power Considerations

The Rio Grande requires a DC supply between 10.5 volts and 18 volts. Either an external DC power supply or battery can provide this power. If you

are using a battery, use the largest rated amp-hour battery as possible. A car battery should last one to two days powering a 600-kHz ADCP.

2.8.3 Mariner Power Considerations

The Mariner deck box automatically scales the input voltage to the proper level. No special jumpers or switch settings are required to select the input voltage. If more than one power source is connected to the deck box, the highest voltage source will be used. Although this is not recommended, it will not damage the deck box.

AC Power. The deck box accepts input voltages of 98-264 VAC, 50-60Hz (J27). This input voltage will be converted to 48 VDC. This is the voltage supplied to the ADCP.

12 VDC Car Battery. Use a 12 VDC car battery (J26) when AC power is not available. The deck box converts the voltage to 48 VDC. This is the voltage supplied to the ADCP. Use the largest rated amp-hour battery as possible. A car battery should last one to two days powering a 1200-kHz ADCP.

DC Power Supply. If you are using an external DC power supply connected to the deck box on J25 (20 to 50 VDC, 3.0 A), the voltage from the external power supply is sent *directly* to the ADCP. This is useful if you want to increase (higher voltage level) or decrease (lower voltage level) the range of the ADCP. The current requirement for the power supply is listed as a reference. Using a lesser-rated power supply can cause the voltage level to drop. The ADCP will draw only the current it needs.

NOTE. Transmitted power increases or decreases depending on the input voltage. Higher voltage to the ADCP (within the voltage range of 20 to 50 VDC) will increase the transmitted power. The transmitted power is increased 6 DB if you double the input voltage from 24 VDC to 48 VDC. For a 300kHz WorkHorse ADCP, each additional DB will result in an increase in range of one default depth cell.

ADCP Internal Batteries. If you want the ADCP to use internal battery power (Sentinel Workhorse ADCP or external battery pack) rather then the deck box power, do the following.

a. Turn OFF or disconnect all power to all ADCP system equipment.

b. Remove the screws on the top cover of the deck box. Lift the cover off.

c. Locate the Filter Interface board (see the Mariner User's Guide for a drawing of the deck box board locations). Locate connector J18 and disconnect the twisted black and white cable plugged into this connector. The power from the deck box to the ADCP has now been disabled. Only the batteries are powering the ADCP.

2.9 Installation Procedures (Overview)

Read these steps before doing them. In general, follow them in the order listed. Some may differ for your installation, so modify them as necessary. Some can be done simultaneously (e.g., hardware installation and software loading). If you have problems or questions, call us.

NOTE. The following procedure applies to WorkHorse Mariner ADCPs. Some parts may apply to WorkHorse Monitor/Sentinel and Rio Grande ADCPs if they are being mounted to a vessel.

a. On receipt of the system, read the WorkHorse Technical Manual.

b. Before installing the system, test the transducer and deck box right out of the shipping container. Do the following.

   1. All power to the system DISCONNECTED.
   2. Review "Power Considerations," page 38.
   3. Connect the I/O cable from the deck box to the ADCP.
   4. Connect the serial I/O cable from the computer to the deck box.
   5. Connect the power cable to the deck box and apply power to the system (the ADCP User's Guide shows all cable connections).
   6. Follow testing procedures in "Maintenance," page 43. Test the system. If errors occur, use "Troubleshooting," page 116.

c. Prepare the system for shipboard installation. Disconnect all power to the system. Disconnect all interface cables.

d. Review "Transducer Head Mounting Considerations," page 17. Install the transducer head. Mechanically align the system (see "Alignment Procedures (Overview)," page 41).

CAUTION. Take steps to prevent leaks through the hull and gate valves.

e. Review section "Mariner Deck Box Mounting Considerations," page 27. As necessary, do the following.

   1. Install the Synchro Interface board in the chassis (see the Mariner's User Guide).
   2. Check all switch settings on the gyro board (shown in the Mariner's User Guide).
   3. Install the deck box.

f. Review "Computer Considerations," page 29. Install the computer.

g. Review "Cabling Considerations," page 28. As necessary, route and connect the following cables:

- Transducer to deck box (J17) interface cable.
- Gyro to deck box (J22) cable.

CAUTION. Signals may be present.

- Navigation to computer cable.

CAUTION. Signals may be present.

h. As necessary, load the software on the computer's hard drive. See the Software User's Guide and the Help files for each program.

i. Configure *VmDas* or *WinRiver*. See the software's help file and the *VmDas* or *WinRiver* User's Guide for help on configuring the program.

j. Do the Dock Side Tests (see "Dock Side Tests," page 102). If errors occur, use "Troubleshooting," page 116.

k. Do the Sea Acceptance testing (see "Sea Acceptance Tests," page 106). The Sea Acceptance tests include the following checks.

- Interference
- Water Profile Range
- Ringing and (cross-coupling, other pingers, noise)
- Water Profile Reasonableness (transducer alignment)
- Bottom-track (range, accuracy)

2.10 Alignment Procedures (Overview)

NOTE. This section does not apply to stationary systems (such as bottom mounted Sentinels). These systems use an internal compass by default.

The mechanical alignment of the transducer head is important to ADCP data accuracy. Mechanically mount the head as close as possible to your reference point. This is usually with the Beam 3 mark at 0° or 45° relative to the ship's fore-to-aft centerline. You also must mount the transducer head as level as possible using the ship's roll and pitch references. Review the "Transducer Head Mounting Considerations," page 17 for alignment considerations.

VmDas uses the **Heading Correction Parameters** on the **Transforms** tab to align the ADCP's north reference (Beam 3 mark) to the north reference of an external gyro/compass. Ships use the bow as the north reference.

When the WorkHorse is aboard a vessel, the mechanical alignment of the transducer head (Beam 3 mark) is usually aligned with the ship's fore-to-aft centerline (0°) or rotated 45° clockwise. To conceptually determine the misalignment angle, visually hold the ADCP still and turn the ship gyro's north reference to match the ADCP's north reference. For example, if the Beam 3 mark is pointing at the bow (Figure 20), the misalignment angle is zero. If the Beam 3 mark is pointing 45° to starboard (Figure 20), you must turn the ship a +45° to align the two north reference points. Conversely, if the Beam 3 mark is pointing 45° to port, you must turn the ship a -45° to align the two reference points.

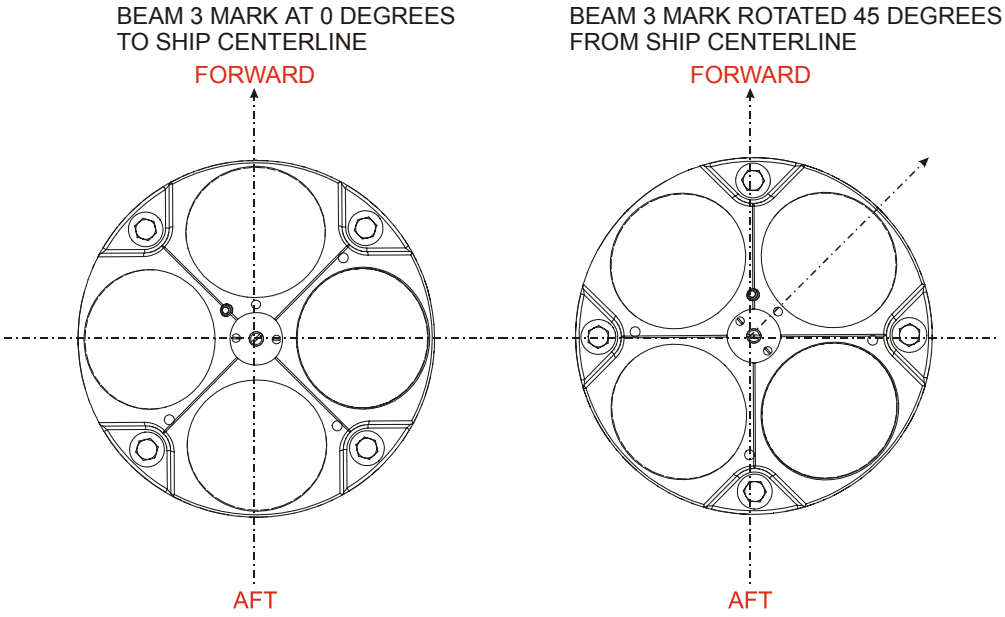

Figure 20. Transducer Misalignment Reference Points

NOTE. The alignment of the transducer installation holes on the Mariner Adapter Plate to the centerline of the transducer is within 0.15 degrees. We recommend you choose a bolt (or stud) that fills the installation holes as close as possible to limit any additional misalignment.

3 Maintenance

This section explains how to prepare the WorkHorse for deployment, how to do certain maintenance procedures, and how to prepare the WorkHorse for storage or shipment.

Table 13, page 77 lists the items in the tools and spares parts kit. Use this kit when doing routine WorkHorse maintenance.

NOTE. When an addition or correction to the manual is needed, an Interim Change Notice will be posted to our web site on the Customer Service page (www.rdinstrument.com). Please check our web site often.

3.1 I/O Cable and Dummy Plug

The underwater connector (on the end-cap) and the I/O cable and dummy plug are molded wet-mate-able connectors. The end-cap connector is a factory-installed item. We do not recommend removing it for any routine maintenance.

NOTE. The dummy plug should be installed any time the I/O cable is removed. Use the dummy plug when the WorkHorse is in storage or is being handled.

3.1.1 Disconnecting the I/O Cable or Dummy Plug

The cable should be disconnected with a straight outward motion only. Use the following procedure to disconnect the cable.

CAUTION. When disconnecting the WorkHorse I/O cable, do not apply any upward force on the connector as it is being pulled off. Applying an upward angle as the cable is disconnected puts stress on the end-cap connector. This may cause several serious problems: a) The end-cap connector or connector pins can crack. b) The O-ring on the bottom of the end-cap connector can be damaged. c) The molded urethane on the end-cap connector may separate from the brass insert. **If the end-cap connector is damaged in any of these ways, your ADCP will flood.**

a. Release the retaining strap by pulling it over the connector.

b. Grasp the cable close to the end-cap (see Figure 21, page 44). Your thumb should rest against the edge of the end-cap.

c. Pull the cable straight out away from the end-cap with a gentle side-to-side rocking motion. Do not apply any upward force on the connector as it is being disconnected.

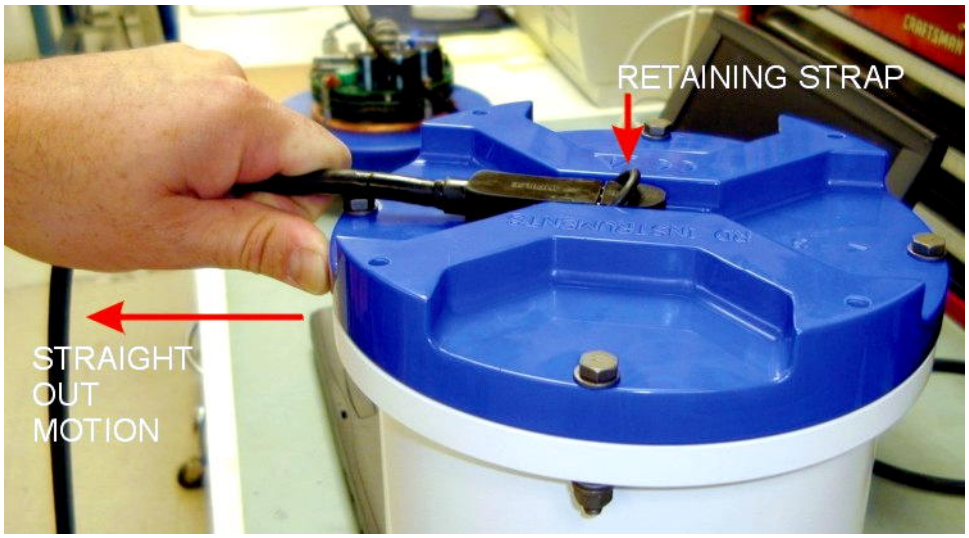

Figure 21. Removing the I/O Cable

3.1.2 Connecting the I/O Cable or Dummy Plug

The cable should be connected with a straight inward motion only. Use the following procedure to connect the cable.

> **CAUTION.** When connecting the WorkHorse I/O cable, do not apply any upward force on the connector as it is being pushed on. Applying an upward angle as the cable is connected puts stress on the end-cap connector. This may cause several serious problems: a) The end-cap connector or connector pins can crack. b) The O-ring on the bottom of the end-cap connector can be damaged. c) The molded urethane on the end-cap connector may separate from the brass insert. **If the end-cap connector is damaged in any of these ways, your ADCP will flood.**

a. Apply a light coat of DC-111 lubricant to the rubber portion of the end-cap connector pins. This will help seat the connector.

b. Gently push the cable straight in toward the end-cap connector. Do not apply any upward force on the connector as it is being connected.

c. Roll the retaining strap over the connector.

3.2 WorkHorse Disassembly

This section explains how to remove and replace the end-cap or transducer head to gain access to the ADCP's electronics, batteries, and internal recorder. Read all instructions before doing the required actions.

3.2.1 End-Cap Removal Procedures

To remove the end-cap, do the following steps. Use "Parts Location Drawings," page 78 for parts identification.

NOTE. When you need access to the electronics, RDI recommends removing the transducer head assembly (see "Transducer Head Assembly Removal," page 46).

a. Dry the outside of the Workhorse.

b. Stand the Workhorse on its transducer face on a soft pad.

c. Remove all power to the Workhorse.

d. Remove the I/O cable and place the dummy plug on the I/O cable connector (see "I/O Cable and Dummy Plug," page 43).

CAUTION. If the ADCP flooded with batteries installed, there may be gas under pressure inside the housing. As a precaution, loosen the four end-cap bolts (6-mm) to vent the system.

a. Loosen (do not remove) the four end-cap bolts to vent the system.

b. Once all four end-cap bolts (6-mm) have been loosened, remove the bolts from the end-cap.

NOTE. Make sure you save all hardware removed during this procedure for re-assembly.

e. Carefully pull the end-cap away from the housing until you can gain access to the connector jack on the common mode choke. Use care; the plastic mating surfaces scratch easily. Do not damage the mating surfaces.

f. Squeeze the sides of the internal I/O cable connector to release it from the common mode choke jack. Set the end-cap aside.

g. Clean the O-ring mating surfaces with a soft, lint-free cloth. Inspect the surfaces for damage (see "O-ring Inspection and Replacement," page 47). Even small scratches can cause leakage around the O-ring seal.

3.2.2 Transducer Head Assembly Removal

> **NOTE.** When you need access to the Sentinel internal battery, remove the end-cap assembly (see "End-Cap Removal Procedures," page 45).

a. Remove all power to the Workhorse.

b. Remove the I/O cable and place the dummy plug on the I/O cable connector (see "I/O Cable and Dummy Plug," page 43).

c. Stand the Workhorse on its end-cap.

> **CAUTION.** If the ADCP flooded with batteries installed, there may be gas under pressure inside the housing. As a precaution, loosen the four end-cap bolts (6-mm) to vent the system.

a. Loosen (do not remove) the four titanium bolts (8-mm) bolts to vent the system.

b. Once all four bolts have been loosened, remove the four bolts that attach the housing flange to the transducer head assembly.

d. Carefully lift the transducer assembly straight up and away from the housing until you can gain access to the connector jack on the common mode choke. Use care; the plastic mating surfaces scratch easily. Do not damage the mating surfaces.

> **NOTE.** The cable attached to the end cap is only long enough to disconnect the internal I/O cable. There is NOT enough cable to set the transducer down next to the Housing Assembly.

e. Squeeze the sides of the internal I/O cable connector to release it from the common mode choke jack. Set the end-cap assembly aside. Set the transducer assembly (transducer face down) on a soft pad.

f. Clean the O-ring mating surfaces with a soft, lint-free cloth. Inspect the surfaces for damage (see "O-ring Inspection and Replacement," page 47).

g. When you are ready to re-assemble the workhorse, see "Workhorse Re-assembly," page 46.

3.3 Workhorse Re-assembly

To replace the end-cap and transducer head, proceed as follows. Use "Parts Location Drawings," page 78 for parts identification.

a. If you are sealing the Workhorse for a deployment, be sure you have done all appropriate maintenance items (see "Sealing the Workhorse for a Deployment," page 66).

b. Make sure all printed circuit boards, spacers, cables, and screws have been installed.

c. Install two fresh bags of desiccant just before closing the Workhorse (see "Desiccant Bags," page 65).

3.3.1 O-ring Inspection and Replacement

This section explains how to inspect/replace the Workhorse O-rings. A successful deployment depends on the condition of two O-rings and their retaining grooves. See "Parts Location Drawings," page 78 for the locations of the following O-rings. Read all instructions before doing the required actions.

- Transducer assembly, face, 2-260
- End-cap assembly, face, 2-260

We strongly recommend replacing these O-rings whenever you disassemble the Workhorse. Inspecting and replacing the O-rings should be the last maintenance task done before sealing the Workhorse.

NOTE. We recommend you use new O-rings if you are preparing for a deployment.

a. Inspect the O-rings. When viewed with an unaided eye, the O-rings must be free of cuts, indentations, abrasions, foreign matter, and flow marks. The O-ring must be smooth and uniform in appearance. Defects must be less then 0.1 mm (0.004 in.).

CAUTION. If the O-ring appears compressed from prior use, replace it. **Weak or damaged O-rings will cause the ADCP to flood.**

b. Clean and inspect the O-ring grooves. Be sure the grooves are free of foreign matter, scratches, indentations, corrosion, and pitting. Run your fingernail across damaged areas. If you cannot feel the defect, the damage may need repair.

CAUTION. Check the O-ring groove thoroughly. **Any foreign matter in the O-ring groove will cause the ADCP to flood.**

c. If a scratch is on the plastic housing flange O-ring groove, it may be gently sanded using 600-grit (wet) sandpaper. Use care not to cause further damage.

d. Lubricate the O-ring with a thin coat of DC-111 lubricant (Table 13, page 77, item 5). Apply the lubricant using latex gloves. Do not let loose fibers or lint stick to the O-ring. Fibers can provide a leakage path.

NOTE. RDI uses Dow Corning's silicone lube model number 111 but any type of silicone O-ring lube can be used.

CAUTION. Apply a **very thin** coat of silicone lube on the O-ring. Using too much silicone lube on the O-ring can be more harmful than using no O-ring lube at all.

3.3.2 End-cap Replacement

a. Stand the Workhorse on its transducer face on a soft pad.

b. Inspect, clean, and lubricate the O-ring on the housing (see "O-ring Inspection and Replacement," page 47). Apply a very thin coat of silicone lube on the O-ring.

NOTE. We recommend you use new O-rings if you are preparing for a deployment.

NOTE. RDI uses Dow Corning's silicone lube model number 111 but any type of silicone O-ring lube can be used.

CAUTION. Apply a **very thin** coat of silicone lube on the O-ring. Using too much silicone lube on the O-ring can be more harmful than using no O-ring lube at all.

c. Connect the internal I/O connector to the plug on the common mode choke.

d. Place the end-cap on the housing, aligning the mating holes and the beam 3 number embossed on the end-cap with the beam 3 number embossed on the transducer head. When mating the end-cap with the housing flange, try to apply equal pressure to all parts of the O-rings. Make sure the face O-ring remains in its retaining groove.

CAUTION. Check that no wires or any other object is pinched between the end-cap and the housing. Use rubber bands to hold the wiring in place as necessary. **If the O-ring is not in the groove or if a wire or other object is pinched, the ADCP will flood.**

e. Examine the titanium end-cap assembly nuts, bolts, and washers (6-mm) for corrosion; replace if necessary. The "Parts Location Drawings," page 78 shows the assembly order of the end-cap mounting hardware. All the hardware items are needed to seal the Workhorse properly.

f. Install all four sets of hardware until "finger-tight."

g. Tighten the bolts in small increments in a "cross" pattern until the split washer flattens out, and then tighten each bolt ¼ turn more to compress

the face seal O-ring evenly. Tighten the bolts to the recommended torque value of 5.6 Newton-meters (50 pound-inches).

CAUTION. Apply equal pressure to the O-ring as you tighten the bolts. If one bolt is tightened more then the others, the O-ring can become pinched or torn. **A damaged O-ring will cause the system to flood.**

CAUTION. Do not over tighten the bolts that hold the transducer, housing, and end cap together. If you tighten too far, you can crack or break the plastic housing. On the other hand, leaving the bolts too loose can cause the system to flood. **Tighten the hardware to the recommended torque value.**

NOTE. The recommended torque value for the end-cap 6-mm bolts is 5.6 Newton-meters (50 pound-inches).

3.3.3 Transducer Head Assembly Replacement

a. Stand the Workhorse on its end-cap.

b. Inspect, clean, and lubricate the O-ring on the housing (see "O-ring Inspection and Replacement," page 47). Apply a very thin coat of silicone lube on the O-ring.

NOTE. We recommend you use new O-rings if you are preparing for a deployment.

NOTE. RDI uses Dow Corning's silicone lube model number 111 but any type of silicone O-ring lube can be used.

CAUTION. Apply a **very thin** coat of silicone lube on the O-ring. Using too much silicone lube on the O-ring can be more harmful than using no O-ring lube at all.

c. Connect the internal I/O connector to the plug on the common mode choke.

d. Gently lower the transducer head/electronics assembly into the housing, aligning the mating holes and the beam 3 number embossed on the transducer head with the beam 3 number embossed on the end-cap. When mating the housing with the transducer head flange try to apply equal pressure to all parts of the O-ring. Make sure the face O-ring remains in the retaining groove.

CAUTION. Check that no wires or any other object is pinched between the transducer head assembly and the housing. Use rubber bands to hold the wiring in place as necessary. **If the O-ring is not in the groove or if a wire or other object is pinched, the ADCP will flood.**

e. Examine the titanium transducer assembly nuts, bolts, and washers (8-mm) for corrosion; replace if necessary. The "Parts Location Drawings," page 78 shows the assembly order of the transducer mounting hardware. All hardware items are needed to seal the Workhorse properly.

f. Install all four sets of hardware until "finger tight."

g. Tighten the bolts in small increments in a "cross" pattern until the split washer flattens out, and then tighten each bolt ¼ turn more to compress the face seal O-ring evenly. Tighten the bolts to the recommended torque value of 9.6 Newton-meters (85 pound-inches). Do not deform the plastic bushings.

CAUTION. Apply equal pressure to the O-ring as you tighten the bolts. If one bolt is tightened more then the others, the O-ring can become pinched or torn. **A damaged O-ring will cause the system to flood.**

CAUTION. Do not over tighten the bolts that hold the transducer, housing, and end cap together. If you tighten too far, you can crack or break the plastic housing. On the other hand, leaving the bolts too loose can cause the system to flood. **Tighten the hardware to the recommended torque value.**

NOTE. The recommended torque value for the transducer head 8-mm bolts is 9.6 Newton-meters (85 pound-inches).

3.4 Mariner Adapter Plate

The adapter plate helps mount the Mariner transducer head to a vessel. See the "Outline Installation Drawings," page 159 for dimensions. The following procedure explains how to install and remove the Adapter Plate on a Workhorse Mariner ADCP.

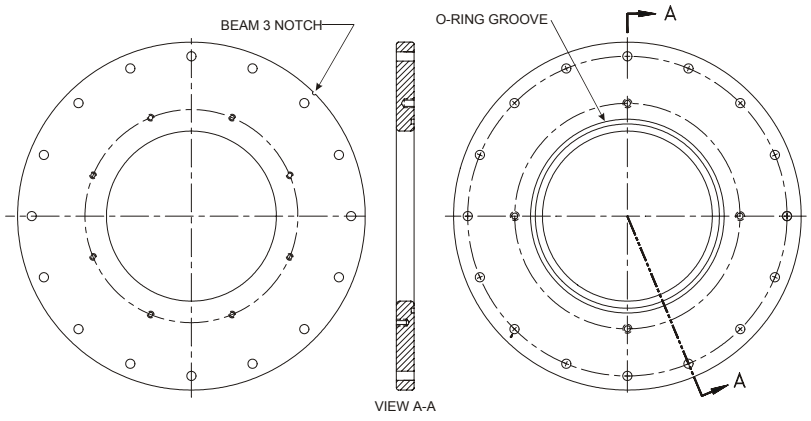

Figure 22. Mariner Adapter Plate

3.4.1 Installing the Adapter Plate

a. Remove the Transducer Assembly (see "Transducer Head Assembly Removal," page 46).

b. Inspect and clean the O-ring groove of the Housing Assembly.

c. Inspect, clean, and lubricate the O-ring (2-260) on the Housing Assembly where the Transducer Assembly was just mounted. Apply a very thin coat of silicone lube on the O-ring.

NOTE. RDI uses Dow Corning's silicone lube model number 111 but any type of silicone O-ring lube can be used.

CAUTION. Apply a **very thin** coat of silicone lube on the O-ring. Using too much silicone lube on the O-ring can be more harmful than using no O-ring lube at all.

d. Inspect and clean the Adapter Plate. Be sure no scratches, dents, or foreign matter is around the area that will be contact with the O-ring on the Housing Assembly.

e. Place the adapter plate on the Housing Assembly, ensuring that the O-ring is not pinched or damaged. Rotate the plate such that the alignment notch in the plate is in alignment with the beam 3 arrow on the end cap.

CAUTION. Check that no wires or any other object is pinched between the adapter plate and the housing. Use rubber bands to hold the wiring in place as necessary. **If the O-ring is not in the groove or if a wire or other object is pinched, the ADCP will flood.**

f. Using four of the titanium 8-mm bolts supplied in the Adapter Plate Kit, secure the Adapter Plate to the Housing Assembly. Install the split lock washer next to the head of the bolt followed by a flat washer before installing the 8-mm bolts.

g. Install all four sets of hardware until "finger-tight."

h. Tighten the bolts in small increments in a "cross" pattern until the split washer flattens out, and then tighten each bolt ¼ turn more to compress the O-ring evenly. Tighten the bolts to the recommended torque value of 9.6 Newton-meters (85 pound-inches).

CAUTION. Apply equal pressure to the O-ring as you tighten the bolts. If one bolt is tightened more then the others, the O-ring can become pinched or torn. **A Damaged O-ring will cause the system to flood.**

CAUTION. Do not over tighten the bolts that hold the transducer, housing, and end cap together. If you tighten too far, you can crack or break the plastic housing flange. On the other hand, leaving the bolts too loose can cause the system to flood. **Tighten the hardware to the recommended torque value.**

NOTE. The recommended torque value for the transducer 8-mm bolts is 9.6 Newton-meters (85 pound-inches).

i. Install a new desiccant bag from the Adapter Plate Kit into the Housing Assembly.

j. Inspect and clean the O-ring groove of the Adapter Plate.

k. Inspect, clean, and lubricate the O-ring (2-260) from the Adapter Plate Kit and set this O-ring into the groove on the Adapter Plate.

l. Connect the cable from the end cap assembly to the Power I/O board on the Transducer Assembly.

m. Place the Transducer Assembly onto the Adapter Plate, ensuring that the O-ring is not pinched or damaged. Rotate the Transducer Assembly such that the beam-3 mark is aligned with both the alignment notch in the Adapter Plate and the beam-3 arrow on the end cap.

CAUTION. Check that no wires or any other object is pinched between the transducer head assembly and the adapter plate. Use rubber bands to hold the wiring in place as necessary. **If the O-ring is not in the groove or if a wire or other object is pinched, the ADCP will flood.**

n. Using the remaining four of the titanium 8-mm bolts supplied in the Adapter Plate Kit, secure the Transducer Assembly to the Housing Assembly. You should install the split lock washer next to the head of the bolt followed by a flat washer before installing the 8-mm bolts.

o. Install all four sets of hardware until “finger-tight.”

p. Tighten the bolts in small increments in a “cross” pattern until the split washer flattens out, and then tighten each bolt ¼ turn more to compress the O-ring evenly. Tighten the bolts to the recommended torque value of 9.6 Newton-meters (85 pound-inches).

CAUTION. Apply equal pressure to the O-ring as you tighten the bolts. If one bolt is tightened more then the others, the O-ring can become pinched or torn. **A Damaged O-ring will cause the system to flood.**

CAUTION. Do not over tighten the bolts that hold the transducer, housing, and end cap together. If you tighten too far, you can crack or break the plastic housing flange. On the other hand, leaving the bolts too loose can cause the system to flood. **Tighten the hardware to the recommended torque value.**

NOTE. The recommended torque value for the transducer 8-mm bolts is 9.6 Newton-meters (85 pound-inches).

3.4.2 Removing the Adapter Plate

a. Remove the Transducer Assembly (see "Transducer Head Assembly Removal," page 46).

b. Remove the four titanium 8-mm bolts that secure the Adapter Plate to the Housing Assembly.

c. Separate the Adapter Plate from the Housing Assembly.

d. Install the Transducer Assembly (see "Transducer Head Assembly Replacement," page 49).

3.5 Sentinel Battery Packs

The Sentinel system uses battery packs to provide power. Batteries should be replaced when the voltage falls below 30 VDC (measured across the battery connector under no-load conditions).

NOTE. Battery replacement induces both single and double cycle compass errors. The compass accuracy should be verified after replacing the battery pack. The compass does not have to be recalibrated if the compass verification passes specification.

These compass effects can be avoided by using an external battery pack. The external battery housing holds two batteries, and can easily be replaced on-site. If properly used, no compass calibration will be required. The external battery pack provides an option for extended ADCP deployments.

NOTE. WorkHorse Sentinel batteries are shipped inside the ADCP but not connected. **Connect the battery and seal the ADCP before deployment.**

3.5.1 Sentinel Battery Replacement

To replace the battery pack, do the following steps.

a. Remove the end-cap (see "End-Cap Removal Procedures," page 45).

b. Disconnect the battery cable going to the common mode choke.

c. Remove the four wing nuts, lock washers, and washers holding the battery pack onto the posts (Figure 35, page 80).

d. Remove the support plate.

e. Slide out the used battery pack.

f. Slide a new battery pack onto the four posts. Make sure the I/O cable is not pinched by the battery pack.

g. Use the large rubber bands (supplied with each new pack) to hold the cables in place.

h. Test the battery pack voltage by measuring across the battery connector under no-load conditions. The voltage should be +42 VDC for a new battery pack.

> **CAUTION.** Older WorkHorse Battery Packs may not contain permanent internal sleeves that protect the battery pack from any accidental shorting against the four End Cap studs. If the battery pack shorts out, it will blow a protective fuse inside the battery pack. **The battery pack is then open and will read as zero volts DC.**

i. Position the support plate over the four posts.

j. Place a flat washer, lock washer, and wing nut on each of the four posts. Tighten the wing nuts firmly to hold the battery in place.

k. Place a battery pack rubber band (two spare rubber bands are provided with each new battery) around all four wing nuts. This will prevent the wing nuts from backing off the post.

> **CAUTION.** The Workhorse Sentinel battery packs are held in place by four sets of washers, lock washers, and wing nuts. If the wing nuts are not tight, the assembly of washers and wing nut can become loose and eventually fall onto the PIO board. **This has caused the PIO board to short out.**

l. Connect the battery cable going to the common mode choke (see Figure 37, page 82)

m. Install the end-cap (see "End-cap Replacement," page 48).

n. Align the compass (see "Compass Calibration," page 56).

3.5.2 External Battery Case Battery Replacement

The external battery case holds two battery packs to provide power. Batteries should be replaced when the voltage falls below +30 VDC (measured across the battery connector under no-load conditions). To replace the battery packs, do the following steps.

> **CAUTION.** The external battery case should not be connected or disconnected underwater. The electrical output power will degrade the connector contacts and present a **potential electrical shock hazard to installation personnel** when the power connector is short-circuited in water. The external battery case output power cannot be enabled or disabled underwater.

a. Remove one end-cap from the external battery pack (see Figure 36, page 81).

b. Place the external battery case on its side and carefully pull out the battery pack (attached to the end-cap).

c. Disconnect the battery power cable from the wiring harness.

d. Remove the four wing nuts, lock washers, and washers holding the battery pack onto the posts (see Figure 35, page 80).

e. Remove the support plate.

f. Slide out the used battery pack.

g. Slide a new battery pack onto the four posts. Make sure the wiring harness is not pinched by the battery pack. Use the large rubber bands (supplied with each new pack) to hold the cables in place.

h. Position the support plate over the four posts.

i. Place a flat washer, lock washer, and wing nut on each of the four posts. Tighten the nuts to hold the battery in place.

j. Test the battery pack voltage by measuring across the battery connector under no-load conditions. The voltage should be +42 VDC for a new battery pack.

CAUTION. Older WorkHorse Battery Packs may not contain permanent internal sleeves that protect the battery pack from any accidental shorting against the four End Cap studs. If the battery pack shorts out, it will blow a protective fuse inside the battery pack. **The battery pack is then open and will read as zero volts DC.**

k. Connect the battery power cable to the wiring harness.

l. Install the end-cap/battery pack assembly (see "End-cap Replacement," page 48).

m. Repeat steps "a" through "l" to replace the other battery pack.

n. Replace the desiccant bags on each battery just before sealing the external battery case (see "Desiccant Bags," page 65).

3.6 Compass Calibration

The main reason for compass calibration is battery replacement. Each new battery carries a different magnetic signature. The compass calibration algorithm corrects for the distortions caused by the battery to give you an accurate measurement. You should be aware of the following items:

- We recommend against calibrating the Workhorse while on a ship. The ship's motion and magnetic fields from the hull and engine will likely prevent successful calibration.
- If you think your mounting fixture or frame has some magnetic field or magnetic permeability, calibrate the Workhorse inside the fixture. Depending on the strength and complexity of the fixture's field, the calibration procedure may be able to correct it.

NOTE. If only the battery modules were removed and replaced back in the same orientation, the compass does not require calibration. If the battery cores were replaced, you **must** verify the compass.

Battery replacement induces both single and double cycle compass errors. The compass accuracy should be verified after replacing the battery pack. The compass does not have to be recalibrated if the compass verification passes specification.

These compass effects can be avoided by using an external battery pack. The external battery housing holds two batteries, and can easily be replaced on-site. If properly used, no compass calibration will be required. The external battery pack provides an option for extended ADCP deployments.

3.6.1 Preparing for Calibration

a. Place the Workhorse on a piece of strong cardboard on top of a smooth wooden (non-magnetic) table. If a wooden table is not available, place the Workhorse on the floor as far away from metal objects as possible. Use the cardboard to rotate the Workhorse during calibration—this way you will not scratch the Workhorse. Place the ADCP in the same orientation as it will be deployed.

NOTE. If you will deploy your Workhorse looking up, calibrate it looking up. If you will deploy it looking down, calibrate it looking down.

CAUTION. If you calibrate the compass in one direction (up or down) and deploy the ADCP in the opposite direction (i.e. calibrate it in a downward position and deploy it in a upward position) the compass calibration will be invalid. Compass errors in excess of 5 degrees may occur.

b. Connect the Workhorse as shown in the appropriate ADCP User's Guide.

c. Start *BBTalk*. See the RDI Tools User's Guide for assistance on using *BBTalk*.

3.6.2 Compass Calibration Verification

Compass calibration verification is an automated built-in test that measures how well the compass is calibrated. The procedure measures compass parameters at every 5º of rotation for a full 360º rotation. When it has collected data for all required directions, the Workhorse computes and displays the results.

NOTE. Verify the compass if you have just replaced the memory module, or any ferrous metals is relocated inside or around the Workhorse housing. Calibrate the compass if the batteries have been replaced (see "Compass Calibration Procedure," page 58).

a. Prepare the ADCP for calibration (see "Preparing for Calibration," page 56).

b. Using *BBTalk,* send a Break to wake up the Workhorse.

c. On the **Transfer** menu, click **Command History**. In the **Enter a Command** box, enter **AX** and click **OK**.

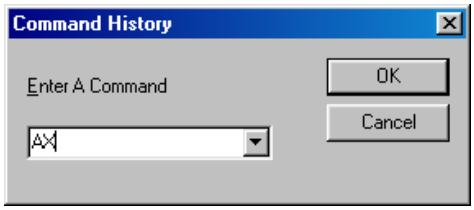

Figure 23. BBTalk Command History Box

d. When prompted, rotate the Workhorse slowly 360 degrees (approximately 5 degrees per second). Pay particular attention to the Overall Error. For example;

```
HEADING ERROR ESTIMATE FOR THE CURRENT COMPASS CALIBRATION:
   OVERALL ERROR:
      Peak Double + Single Cycle Error (should be < 5():   ( 1.55(
   DETAILED ERROR SUMMARY:
      Single Cycle Error:                                  ( 1.54(
      Double Cycle Error:                                  ( 0.07(
      Largest Double plus Single Cycle Error:              ( 1.61(
      RMS of 3rd Order and Higher + Random Error:          ( 0.31(
```

If the overall error is less than 2°, the compass does not require alignment. You can align the compass to reduce the overall error even more (if desired).

3.6.3 Compass Calibration Procedure

The built-in automated compass calibration procedure is similar to the alignment verification, but requires three rotations instead of one. The Workhorse uses the first two rotations to compute a new calibration matrix and the third to verify the calibration. It will not accept the new matrix unless the calibration was carried out properly, and it asks you to verify that you want to use the new calibration if it is not as good as the previous calibration. While you are turning the Workhorse for the two calibration rotations, the Workhorse checks the quality of the previous calibration and displays the results. It compares these results with the results of the third calibration rotation.

There are two compass calibrations to choose from; one only corrects for hard iron while the other corrects for both hard and soft iron characteristics for materials rotating with the ADCP. Hard iron effects are related to residual magnetic fields and cause single cycle errors while soft iron effects are related to magnetic permeability that distorts the earth's magnetic field and causes double cycle errors. In general, the hard iron calibration is recommended because the effect of hard iron dominates soft iron. If a large double cycle error exists, then use the combined hard and soft iron calibration.

a. Prepare the ADCP for calibration (see "Preparing for Calibration," page 56).

b. Using *BBTalk,* send a Break to wake up the ADCP.

c. On the **Transfer** menu, click **Command History**. In the **Enter a Command** box, enter **AF** and click **OK**. When the calibration procedure starts, choose the calibration type.

d. Tilt the ADCP (see Figure 24, page 59). Tilt an upward-looking Workhorse with a block under one side of the end-cap. A 35-mm block will give you an 11-degree tilt. Check the on-screen instructions to see if the orientation is OK. Adjust as necessary.

NOTE. The tilts must remain constant during the rotations. The transducer beam is the center point of the rotation.

e. When prompted, rotate the ADCP slowly 360 degrees (approximately 5 degrees per second).

f. The second rotation requires the ADCP to be tilted 15 degrees in another direction than from the first rotation (see Figure 24, page 59). Follow the on-screen instructions to orient the ADCP correctly. When prompted, rotate the ADCP slowly 360 degrees (approximately 5 degrees per second).

g. The third rotation requires the ADCP to be tilted 15 degrees in another direction than from the first and second rotations. Follow the on-screen instructions to orient the ADCP correctly.

h. If the calibration procedure is successful, it records the new calibration matrix to nonvolatile memory. The ADCP will not change its matrix unless the calibration is properly carried out.

i. If the calibration procedure is not successful, return your ADCP to the original factory calibration, by using the AR-command. Try using the AR-command if you have trouble calibrating your compass. In some circumstances, a defective compass calibration matrix can prevent proper calibration.

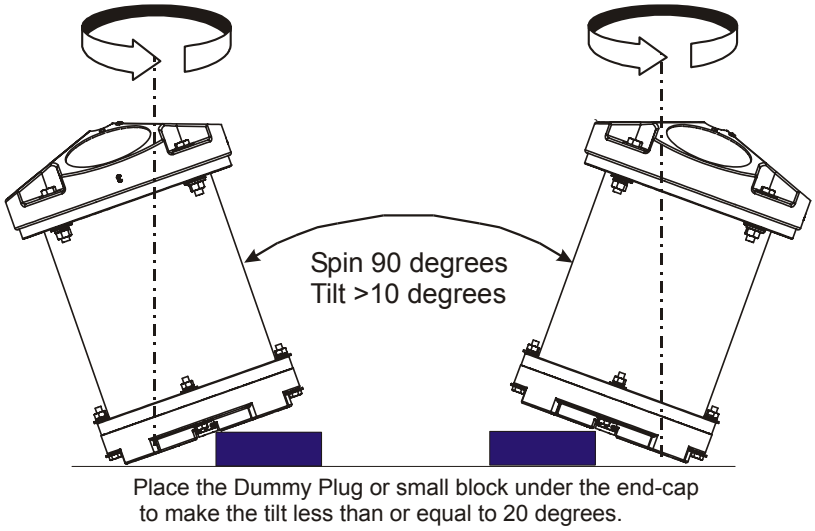

Figure 24. Compass Calibration

3.7 Fuse Replacement

PIO Board. There is one fuse on the PIO Board (see Figure 37, page 82) that protects the Workhorse from excessive incoming power. If this fuse continues to blow, check your input power before applying power again.

a. Turn off the power.

b. Remove the transducer head (see "Transducer Head Assembly Removal," page 46).

c. The PIO board fuse is located next to the internal I/O connector. Use a small flat-blade screwdriver to open the fuse housing. Turn the end 180° (counter-clockwise) to open the fuse housing.

d. Gently pull the fuse housing out. Turn the housing to remove the fuse.

e. Check the fuse using an ohmmeter. Replace the fuse if necessary with the correct voltage and amperage fuse (Table 13, page 77 item 7).

f. Install the transducer head (see "Transducer Head Assembly Replacement," page 49).

g. Test the system (see "Testing the WorkHorse," page 96).

External Battery Pack. One fuse in the external battery pack protects the Workhorse from excessive incoming power. If this fuse continues to blow, check your battery packs before connecting the external battery case again.

a. Remove one end-cap from the external battery pack (see "End-Cap Removal Procedures," page 45).

b. Carefully lift out the battery pack (attached to the end-cap).

c. Check the fuse using an ohmmeter. Replace the fuse if necessary with the correct voltage and amperage fuse (Table 13, page 77 item 7).

d. Install the end-cap (see "End-cap Replacement," page 48).

e. Measure the voltage output of the external battery case across pin 3 (+) and pin 7 (-) on the external connector. If both battery packs are fresh, you should measure approximately +42 VDC.

Mariner Deck Box. The Deck Box back panel has three fuses.

- FUSE F1 - 5 Amp, 250 V, slow-blow, 5x20mm, clip-mounted. This fuse protects Deck Box circuits from input overload on J25 (20-60 VDC power input).
- FUSE F2 - 10 Amp, 250 V, slow-blow, 5x20mm, clip-mounted. This fuse protects Deck Box circuits from input overload on J26 (12 VDC power input).

- FUSE F3 - 5 Amp, 250 V, slow-blow, 5x20mm, clip-mounted. This fuse protects Deck Box circuits from input overload on J27 (98 - 264 VAC power input).

a. Turn off power to the deck box.

b. Press down gently on the top edge of the fuse holder.

c. Pull the fuse holder out and down. It will extend approximately one inch. Do not attempt to remove it completely.

d. The fuse closest to the inside of the deck box is the fuse in use. Check the fuse using an ohmmeter. There may be a spare fuse attached to the holder. Verify that the spare fuse is the correct voltage and amperage before using.

e. Place the replacement fuse (and another spare as necessary) in the fuse holder.

f. Gently push the fuse holder back in place.

g. Turn on power and test the system (see "Testing the WorkHorse," page 96).

Mariner Deck Box Power Supply. The Deck Box Power Supply has one fuse (F1 - 5 Amp, 250 V, fast-blow, clip-mounted). This fuse protects the Deck Box Power Supply circuits from input overload.

a. Turn off power to the deck box.

b. Remove the Deck Box top cover.

c. Remove the fuse from the clips. Check the fuse using an ohmmeter. Replace the fuse if necessary with the correct voltage and amperage fuse.

d. Replace the Deck Box top cover.

e. Turn on power and test the system (see "Testing the WorkHorse," page 96).

3.8 Communications Setting

A switch on the PIO board (see Figure 25) changes the communication settings between RS-232 and RS-422. Your computer and the Workhorse must both be set to the same communication setting. Use the RS-232-to-RS-422 converter if the Workhorse is using RS-422 communications and you computer only has an RS-232 COM port.

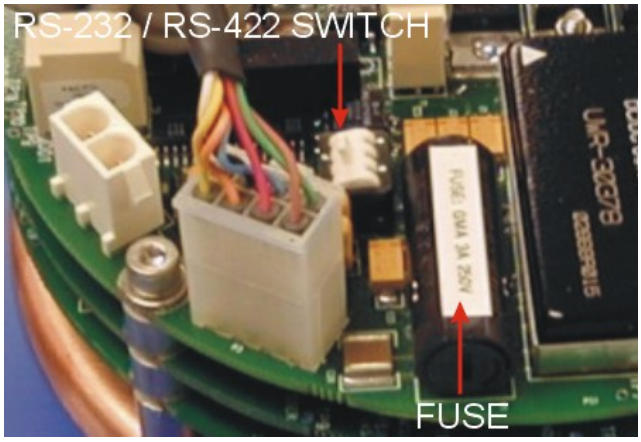

Figure 25. Communication Switch and Fuse

3.9 Firmware Upgrades

The firmware for Workhorse ADCPs in located on flash RAM chips on the CPU board. Firmware must be downloaded. Use the following procedure to download firmware to the Workhorse.

a. Connect your ADCP to the computer as shown in the appropriate ADCP User's Guide.

b. Start the program *WHxxFW.exe* (where *xx* is the firmware number).

c. Click **Setup**. Click the **View README.TXT** button to view the Readme.txt file for details on what is new in this version of the firmware.

d. Click **Next** and follow the on-screen prompts.

e. If you are not able to install the new firmware, contact Customer Service.

f. After successfully upgrading the firmware, use *BBTalk* to test the ADCP (see "Testing the WorkHorse," page 96).

3.10 Feature Upgrades

The feature upgrade installation program is used to install Bottom Tracking, Shallow Water Bottom Mode, Lowered ADCP (LADCP), Water Profiling (for Navigators), High-Resolution Water-Profiling mode, High Ping Rate, and Waves capabilities in a Workhorse ADCP.

NOTE. The upgrade disk is specific to the unit for which it was ordered. DO NOT attempt to install this feature for any other unit.

NOTE. Many feature upgrades require the latest firmware version to be installed in your ADCP. If you need to update the firmware, do this before installing the feature upgrade (see “Firmware Upgrades,” page 62).

a. Set up the Workhorse as shown in the appropriate ADCP User's Guide.

b. Place the feature upgrade disk in the disk drive (usually the “A” drive).

c. Click the Windows **Start** button, and then select **Run**.

d. In the **Open** box, type A:*xxx*.exe, where *xxx* is the ADCP’s CPU serial number. The installation program will start (see Figure 26). The program is encoded with the ADCP’s serial number and the requested feature upgrade.

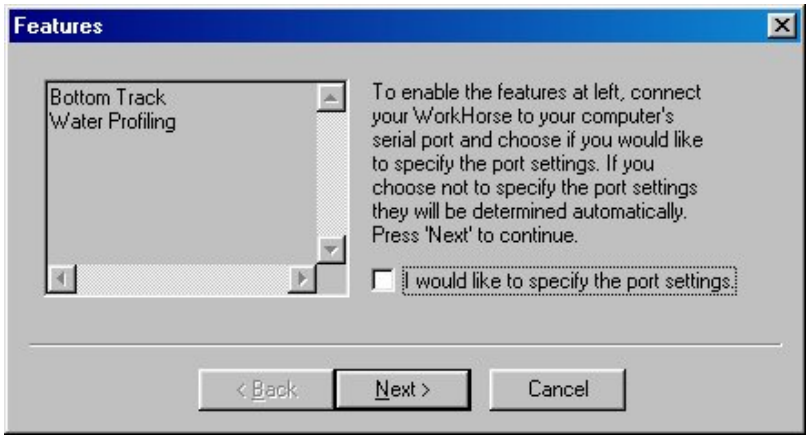

Figure 26. Installing Feature Upgrades

e. To select the port settings, select the **I would like to specify the port setting** box and click **Next**.

f. Select the **Serial Port** and **Baud Rate**.

g. Click **Next** to install the feature upgrade. Click the **Finish** button to exit the program.

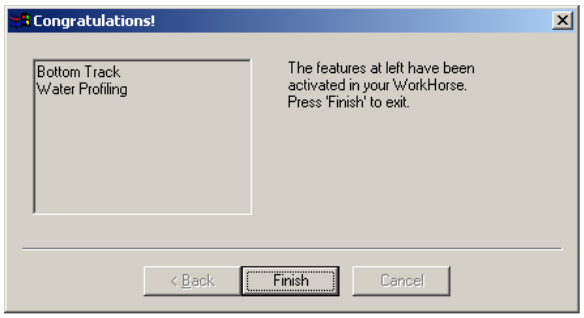

Figure 27. Feature Upgrade Completed

h. Start *BBTalk* and use the OL command (see the Workhorse Commands and Output Data Format guide) to verify the feature upgrade has been installed.

3.11 PC Card Recorder

The PC Card recorder is located on the Digital Signal Processor (DSP) board inside the Workhorse's electronics (see Figure 28). To recover data, the card can be removed and used in a personal computer (PC), or left in the Workhorse, and accessed by using *WinSC* (see the *WinSC* User's Guide). To remove or install a PC card, do the following.

a. Turn off power to the Workhorse.

b. Remove the transducer head (see "Transducer Head Assembly Removal," page 46).

c. Remove the PC cards by pushing the button on the side of the PCMCIA card slot. The card should "pop" out of the connector. If you cannot reach the release button with your finger, use a plastic pen or non-conductive tool to depress the button. Do not try to force the card in or out of the connector. PC cards slide easily in or out when properly oriented.

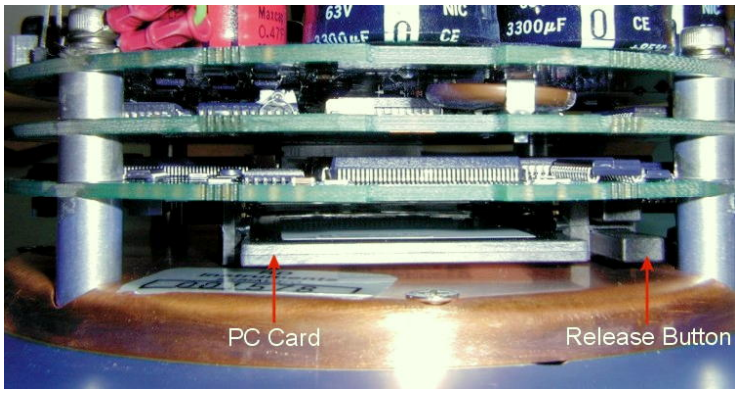

Figure 28. PC Card Recorder

d. When you are finished recovering the data, install the PC card back into the DSP board. PC cards install with the label side toward the face of the transducer.

e. Install the transducer head (see "Transducer Head Assembly Replacement," page 49).

NOTE. RDI uses true 16-bit PCMCIA/ATA, 5-volt, type 2 memory cards made by SANDISK (old name was SUNDISK). These cards must be formatted before using in the WorkHorse. Other cards may work but we have not had any success.

Memory card are not included with Navigator, Rio Grande, Monitor, and Mariner models. Sentinel and Long Ranger ADCPs come standard with one memory card. Two PCMCIA memory card slots are available, with the total memory capacity not to exceed 2GB.

3.12 Desiccant Bags

Desiccant bags are used to dehumidify the housing interior. Desiccant is essential in deployments with plastic housings. The factory-supplied desiccant lasts a year at specified Workhorse deployment depths and temperatures. Remember that desiccant rapidly absorbs moisture from normal room air.

The average dry weight of a new desiccant bag is 7.2 grams ((5%). The weight increases to 8.4 to 9 grams for a "used" desiccant bag. Used desiccant bags may be dried at 250° for 14 hours. As a minimum, replace the desiccant bags (Table 13, page 77, item 6) whenever you are preparing to deploy or store the Workhorse for an extended time.

CAUTION. Do not open the desiccant bag. Contact with the silica gel can cause nose, throat, and skin irritation.

NOTE. Desiccant bags are shipped in an airtight aluminum bag to ensure maximum effectiveness. There is a moisture indicator inside the bag. If the moisture indicator is pink, do not use the desiccant bag until it has been dried. RDI recommends replacing the desiccant bag just before the deployment.

a. Remove the transducer head (see "Transducer Head Assembly Removal," page 46).

b. Remove the new desiccant bags from the airtight aluminum bag.

c. Remove the old desiccant bags and install two new ones. Place the desiccant bags (Table 13, page 77, item 6) between the PIO board and the end-cap.

d. Install the transducer head (see "Transducer Head Assembly Replacement," page 49).

3.13 Sealing the Workhorse for a Deployment

Use the "Parts Location Drawings," page 78 and the following steps to seal the Workhorse for a deployment.

a. Check the Workhorse electronics; there should be no loose screws or missing hardware.

b. Install the PC card(s) (Sentinel ADCPs only, see "PC Card Recorder," page 64)

c. Replace the battery pack or connect the battery cable (Sentinel ADCPs only, see "Sentinel Battery Packs," page 53)

d. Add two fresh desiccant bags inside the Workhorse housing (see "Desiccant Bags," page 65).

e. Install the transducer head assembly and end-cap (see "Workhorse Re-assembly," page 46).

f. The Workhorse is now ready for deployment unless you want to take steps to prevent biofouling (see "Prevention of Biofouling," page 66).

g. Use the appropriate ADCP User's Guide to connect the Workhorse system. Use "Testing the WorkHorse," page 96 to test the Workhorse before the deployment.

3.14 Prevention of Biofouling

This section explains how to prevent the buildup of organic sea life (biofouling) on the transducer faces. Objects deployed within about 100 meters (≈328 feet) of the surface are subject to biofouling, especially in warm, shallow water.

Deep Water Deployments. Biofouling is not usually a problem in deep water (more than 100 meters). Soft-bodied organisms usually cause no problems. Do not apply antifouling grease if deploying the WorkHorse in deep water.

Shallow Water Deployments. Soft-bodied organisms usually cause no problems, but barnacles can cut through the urethane transducer face causing failure to the transducer and leakage into the WorkHorse (see Figure 29, page 67).

In shallow-water applications, the use of antifouling grease may be appropriate if you cannot clean the transducer faces often (weekly), and if the antifouling grease meets all of your local safety and environmental laws.

3.14.1 Controlling Biofouling

The best-known way to control biofouling is cleaning the WorkHorse transducer faces often. However, in many cases this is not possible. The following options can help reduce biofouling.

- Coat the entire WorkHorse with the recommended antifouling paint. Make sure that the paint is applied in an even coat over the transducer faces.
- Apply a thin coat (≈4 mm; ≈0.16 in.) of either a 50:50 mix of chili powder and petroleum jelly or chili powder and silicone grease to the transducer faces. The chili powder should be the hottest that can be found. Water flowing across the transducers will wash this mix away over time. The silicone mixture tends to last longer.

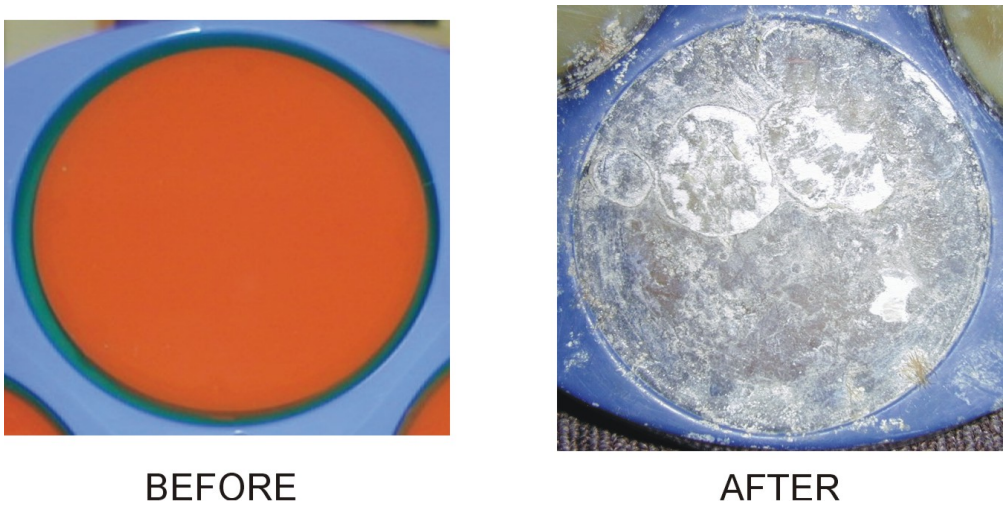

Figure 29. Barnacle Damage

CAUTION. Barnacles can cut through the urethane transducer face causing failure to the transducer and leakage into the WorkHorse.

If using antifouling grease, remove the grease immediately after recovering the WorkHorse from its deployment. Remove the grease with soapy water. Be sure to wear protective gloves and a face shield.

CAUTION.

1. Do not arbitrarily use antifouling grease for deep-water applications. For shallow-water applications, barnacles are a threat to the transducer faces; using antifouling grease may be appropriate if you cannot clean the WorkHorse regularly (weekly). If using antifouling grease, remove it immediately after recovering the WorkHorse.

2. Antifouling grease is toxic. Read the product safety data sheet before using the grease. Wear gloves and a face shield when applying the grease. If the skin comes in contact with the grease, immediately wash the affected area with warm, soapy water.
3. All U.S. coastal states prohibit the use of tributyl-tins on boat hulls. The European Economic Commission has released a draft directive that would prohibit the use of many organo-tins after July 1989. We strongly recommend you obey your local laws.

3.14.2 Recommended Antifouling Paints

The plastic WorkHorse housing simplifies anti-fouling paint application. You can use almost any EPA approved anti-fouling paint on the housing or the urethane transducer faces. You do have to be extra careful with the urethane faces. We recommend the TRILUX II paint from Interlux.

Manufacturer	Contact
Courtalds Finishes	Telephone: 908-686-1300
Interlux brand paints	Web Page: www.interlux.com

3.14.3 Applying Antifouling Paints

Follow the urethane faces application instructions for TRILUX II. One thin coat can last for several months.

NOTE. If you have an optional WorkHorse pressure sensor, and you want pressure (depth) data, you cannot protect the pressure sensor from biofouling. The pressure sensor is located near the center of the transducer array, between the urethane-covered transducers. The sensor port is a small hole drilled through a screw (see "Pressure Sensor Maintenance," page 70). You should tape off the screw during anti-fouling paint application.

This means that the sensor port is not fully protected from bio fouling. The sensor port is surrounded by the antifouling paint, but bio fouling may build up on the screw, and eventually clog the sensor port. However, most organisms do not seem to find the small amount of unpainted surface attractive. If it is logistically possible to periodically inspect/clean the pressure sensor screw, it is highly recommended. This tradeoff situation must be analyzed for individual deployments. Unfortunately, the location of the deployment site usually dictates action in this regard.

Transducer Faces (urethane surfaces) and Plastic Housing

a. Preparation - Lightly sand by hand with 120-grit paper.

b. Application - Apply one or two coats of Trilux-2 at four mil/coat. If applying a second coat, wait at least 12 hours to allow the first coat to dry. One coat lasts one season (3-4 months); two coats might last one year.

Metal Surfaces (High Pressure Systems)

a. Metal Surface Preparation

   1. On bare aluminum metal, use 353/354 Vinylux solvent wash (thin with 355). Perform the Metal Surface Application (Step (b), below) between 1 and 24 hours.

   2. On painted surfaces, use 120-grit sandpaper to remove gloss.

b. Metal Surface Application

   1. Mask as necessary.

   2. Apply one or two coats of Trilux-2 (active ingredient is copper thiocyanate) at four mil/coat. If applying a second coat, wait at least 12 hours to allow the first coat to dry. One coat lasts one season (3-4 months); two coats might last one year.

NOTE. Do NOT use cuprous oxide on or near aluminum systems.

Figure 30. Antifouling Paint Applied to a WorkHorse Sentinel

3.15 Thermistor Maintenance

In order to respond quickly to changes in the water temperature, water must be able to flow over the sensor. Do not block the sensor or paint over it with antifouling paint. Remove any biofouling as soon as possible.

NOTE. The Thermistor is embedded in the transducer head. The sensor is under a titanium cover that is highly resistant to corrosion.

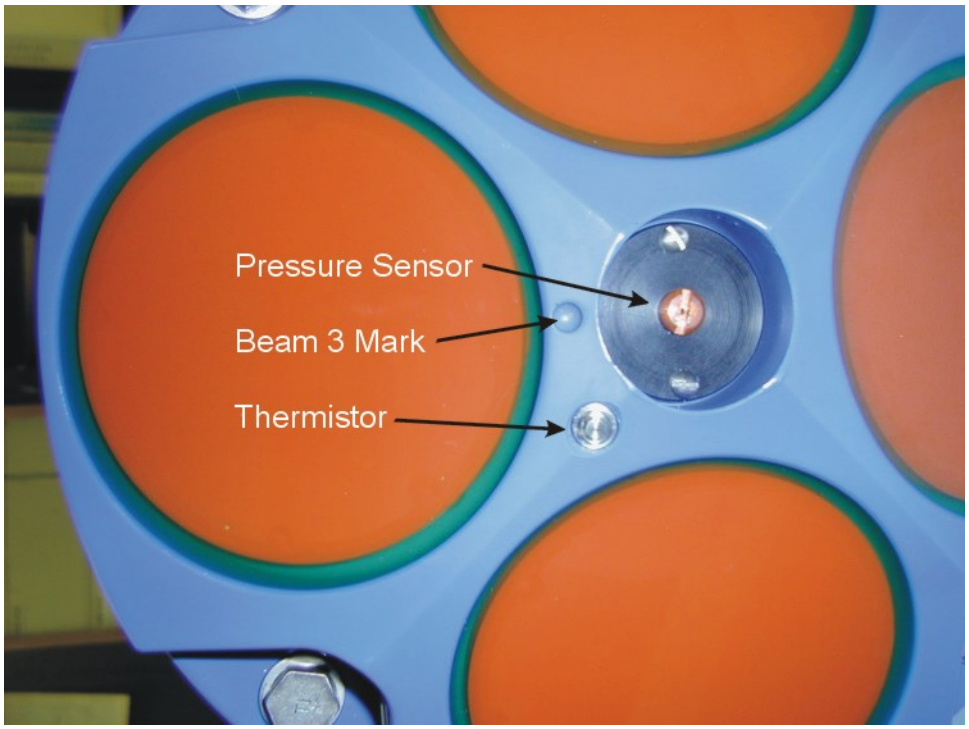

Figure 31. Thermistor and Pressure Sensor

3.16 Pressure Sensor Maintenance

In order to read the water pressure, water must be able to flow through the copper screw on the pressure sensor. The tiny hole in the copper screw may at times be blocked. Use the following procedure and Figure 32, page 71 to clean the screw.

NOTE. The pressure sensor is optional. It may not be included on your system.

a. Place the ADCP on its' end-cap. Use a soft pad to protect the ADCP.

b. Use a straight-slot screwdriver to remove the copper screw.

c. Gently clean out the hole in the copper screw with a needle. If the hole becomes enlarged or the screw is corroded, replace the screw. A replacement copper screw is included in the spare parts kit (part number 817-1067-00).

d. Install the copper screw. Tighten the screw "finger tight" (2 in/lbs). Do not over tighten the screw or you may strip the threads on the plastic cover disc. If this happens, return the ADCP to RDI for repair.

CAUTION.

The pressure sensor is filled with silicone oil. Never poke a needle or other object through the copper screw while the screw is installed over the pressure sensor. You will perforate the sensor, causing it to fail.

Do not remove the cover disc or attempt to clean the surface of the pressure sensor. The diaphragm is very thin and easy to damage.

Do not remove the pressure sensor. It is not field replaceable.

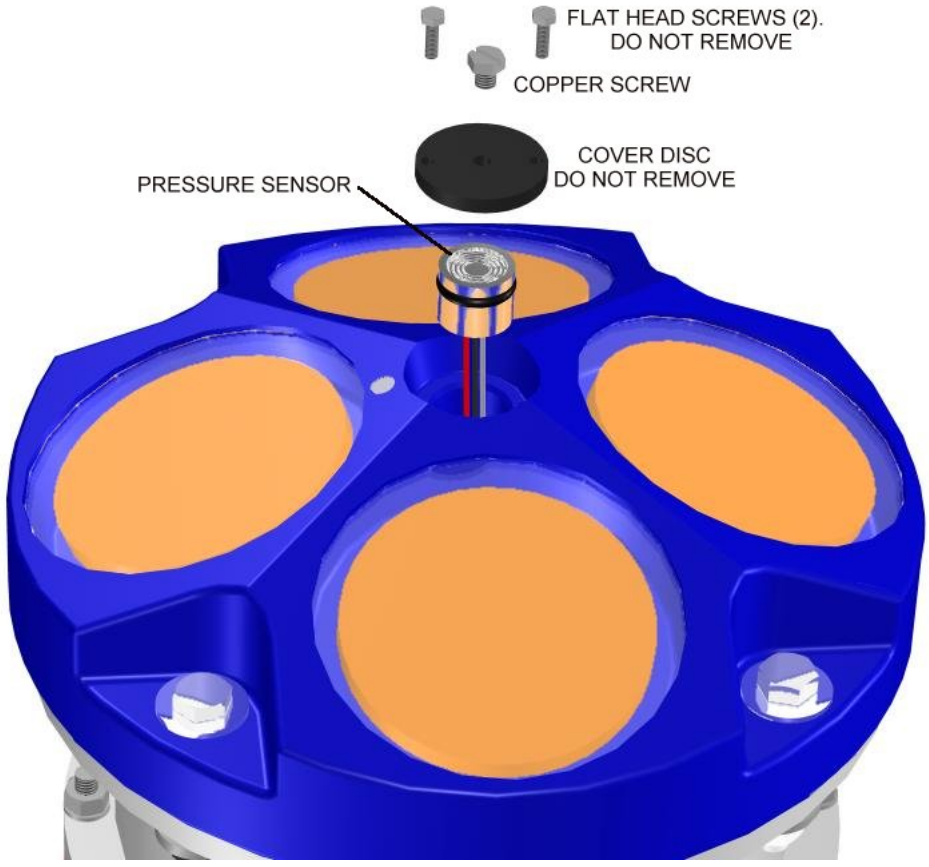

Figure 32. Workhorse Pressure Sensor (Exploded View)

3.17 Storage and Shipping Maintenance

This section lists the maintenance items to do before storing the Workhorse. These maintenance items include:

- Removing biofouling (see "Removal of Biofouling," page 72).
- Inspecting the transducer head (see "Transducer Head Inspection," page 72).
- Preparing the Workhorse for final storage or shipping (see "Final Storage or Shipping Preparation," page 73).

3.17.1 Removal of Biofouling

Before storing or shipping the Workhorse, remove all foreign matter and biofouling. Remove soft-bodied marine growth or foreign matter with soapy water. Waterless hand cleaners remove most petroleum-based fouling. Rinse with fresh water to remove soap residue. Dry the transducer faces with low-pressure compressed air or soft lint-free towels.

CAUTION. The soft, thin urethane coating on the transducer faces is easily damaged. Do not use power scrubbers, abrasive cleansers, scouring pads, high-pressure marine cleaning systems, or brushes stiffer than hand cleaning brushes on the transducer faces.

If there is heavy fouling or marine growth, the transducer faces may need a thorough cleaning to restore acoustic performance. Barnacles do not usually affect Workhorse operation. We do however recommend removal of the barnacles to prevent water leakage through the transducer face. Lime dissolving liquids such as Lime-Away® break down the shell-like parts. Scrubbing with a medium stiffness brush usually removes the soft-bodied parts. Do NOT use a brush stiffer than a hand cleaning brush. Scrubbing, alternated with soaking in Lime-Away®, effectively removes large barnacles. After using Lime-Away®, rinse the Workhorse with fresh water to remove all residues. If barnacles have entered more than 1.0 to 1.5 mm (0.06 in.) into the transducer face urethane, you should send the Workhorse to RDI for repair (see Figure 29, page 67). If you do not think you can remove barnacles without damaging the transducer faces, contact RDI.

3.17.2 Transducer Head Inspection

The urethane coating on the transducer faces is important to Workhorse watertight integrity. Mishandling, chemicals, abrasive cleaners, and excessive depth pressures can damage the transducer ceramics or urethane coating. Inspect the transducer faces for dents, chipping, peeling, urethane shrinkage, hairline cracks, and damage that may affect watertight integrity or

transducer operation. Repair of the transducer faces should only be done by RDI.

CAUTION. Never set the transducer on a rough surface; always use foam padding to protect the transducers.

3.17.3 Final Storage or Shipping Preparation

This section explains how to store or ship the Workhorse. Clean and inspect the I/O connector for water or salt residue.

CAUTION. If you are shipping a Workhorse to RDI for repair or upgrade, remove all customer-applied coatings or provide certification that the coating is nontoxic. This certification must include the name of a contact person who is knowledgeable about the coating, the name, and manufacturer of the coating, and the appropriate telephone numbers. If you return the equipment without meeting these conditions, we have instructed our employees not to handle the equipment and to leave it in the original shipping container pending certification. If you cannot provide certification, we will return the equipment to you or to a customer-specified cleaning facility. All costs associated with customer-applied coatings will be at the customer's expense.

When shipping the Workhorse through a Customs facility, be sure to place the unit/s so identifying labels are not covered and can be seen easily by the Customs Inspector. Failure to do so could delay transit time.

NOTE. RDI strongly recommends using the original shipping crate whenever transporting the Workhorse.

If you need to ship or store the Workhorse, use the original shipping crate whenever possible. If the original packaging material is unavailable or unserviceable, additional material is available through RDI.

For repackaging with commercially available materials, use the following procedure:

a. Use a strong shipping container made out of wood or plastic.

b. Install a layer of shock-absorbing static-shielding material, 70-mm to 100-mm thick, around all sides of the instrument to firmly cushion and prevent movement inside the container.

c. Seal the shipping container securely.

d. Mark the container FRAGILE to ensure careful handing.

e. In any correspondence, refer to the Workhorse by model and serial number.

3.18 Returning WorkHorses to RDI for Service

When shipping the WorkHorse to RDI from either inside or outside the United States, the following instructions will help ensure the WorkHorse arrives with the minimum possible delay. Any deviation from these instructions increases the potential for delay.

3.18.1 Domestic Shipments

Step 1 - Get a Return Material Authorization

The best way to make sure RDI is aware of your intentions to ship equipment is to obtain a Return Material Authorization (RMA) before sending the shipment. Return Material Authorizations are issued by Sales Administration or Customer Service and are used to notify us of your needs in advance of arrival so we can provide a faster turnaround. When requesting a Return Material Authorization, please give us the following information.

- What is being shipped (include the serial number)
- When you plan to send the shipment
- What problem(s) need correction
- When you need the instrument returned

When the Return Material Authorization is issued, we will tell you the RMA number. Please include this number on all packages and correspondence.

Step 2 - Ship via air freight, prepaid

Urgent Shipments should be shipped direct to RDI via any of several overnight or priority air services. Do not send urgent airfreight as part of a consolidated shipment. If you ship consolidated, you will save money, but may lose up to three days in transit time.

Non-urgent shipments may be shipped as part of a consolidated cargo shipment to save money. In addition, some truck lines may offer equivalent delivery service at a lower cost, depending on the distance to San Diego.

Mark the Package(s)

To: RD Instruments, Inc. (RMA Number)
9855 Businesspark Avenue
San Diego, CA 92131-1101

Step 3 - Urgent shipments

Send the following information by fax or telephone to RDI.

Attention: Sales Administration
Fax: (858) 695-1459
Phone: (858) 693-1178

- Detailed descriptions of what you are shipping (number of packages, sizes, weights, and contents).
- The name of the freight carrier
- Master Air bill number
- Carrier route and flight numbers for all flights the package will take

3.18.2 International Shipments

Step 1 - Get a Return Material Authorization

The best way to make sure RDI is aware of your intentions to ship equipment is to obtain a Return Material Authorization (RMA) before sending the shipment. Return Material Authorizations are issued by Sales Administration or Customer Service and are used to notify us of your needs in advance of arrival so we can provide a faster turnaround. When requesting a Return Material Authorization, please give us the following information.

- What is being shipped (include the serial number)
- When you plan to send the shipment
- What problem(s) need correction
- When you need the instrument returned

When the Return Material Authorization is issued, we will tell you the RMA number. Please include this number on all packages and correspondence.

Step 2 - Ship Via Air Freight, Prepaid

Urgent Shipments should be shipped direct. Do not send urgent airfreight as part of a consolidated shipment. If you ship consolidated, you will save money, but may lose up to five days in transit time.

Non-urgent shipments may be shipped as part of a consolidated cargo shipment to save money.

Mark the package(s) as follows:

To: RD Instruments, Inc. (RMA Number)
5 Avenue Hector Pintus
06610 La Gaude, France

Step 3 - Include Proper Customs Documentation

The Customs statement should be completed very carefully. It should accurately and truthfully contain the following information.

- Contents of the shipment
- Value
- Purpose of shipment (example: "American made goods returned for repair")
- Any discrepancy or inaccuracy in the Customs statement could cause the shipment to be delayed in Customs.

Step 4 - Send the Following Information by Fax or Telephone to RDI

Attention: **Sales Administration**
Phone: **+33(0) 492-110-930**
Fax: **+33(0) 492-110-931**

- Detailed descriptions of what you are shipping (number of packages, sizes, weights, and contents).
- The name of the freight carrier
- Master Air bill number
- Carrier route and flight numbers for all flights the package will take

3.19 Spare Parts

Table 13: Workhorse Spare Parts

Item #	Part #	Qty	Description
1.	2-260	4	O-Ring, Face Seal, Duro 70 EPDM
2.	717-3008-00	1	Jumper, GND, Main Electronics
3.	817-1067-00	1	Screw, Pressure Sensor, Workhorse
4.	817-3003-00	4	Washer, Felt Workhorse Electronics
5.	DC-111	1	Lubricant, Silicone1, 5.3oz Tube
6.	DES3	1	Desiccant, Sealed Bag
7.	GMA-3A	2	Fuse, 5mm X 20mm 3A 250V
8.	M6WASHSPLTI	2	Washer, 6mm Split Lock Titanium
9.	M6WASHSTDTI	4	Washer, Flat, Titanium 12.5mm OD
10.	M6X1.0NUTTI	2	Nut, Hex, Titanium 10mm
11.	M6X1.0X45HHTI	2	Screw, Hex Head, Titanium
12.	M8WASHSPLTI	2	Washer, Split Lock, Titanium
13.	M8WASHSTDTI	4	Washer, Flat, Titanium 12.5mm OD
14.	M8X1.25NUTTI	2	Nut, Hex, Titanium 13mm
15.	M8X1.25X65HHTI	2	Screw, Hex Head, Titanium
16.	SPR84-1LB	4	Rubber Band

3.20 Parts Location Drawings

Use the following figures to identify the parts used on your WorkHorse ADCP.

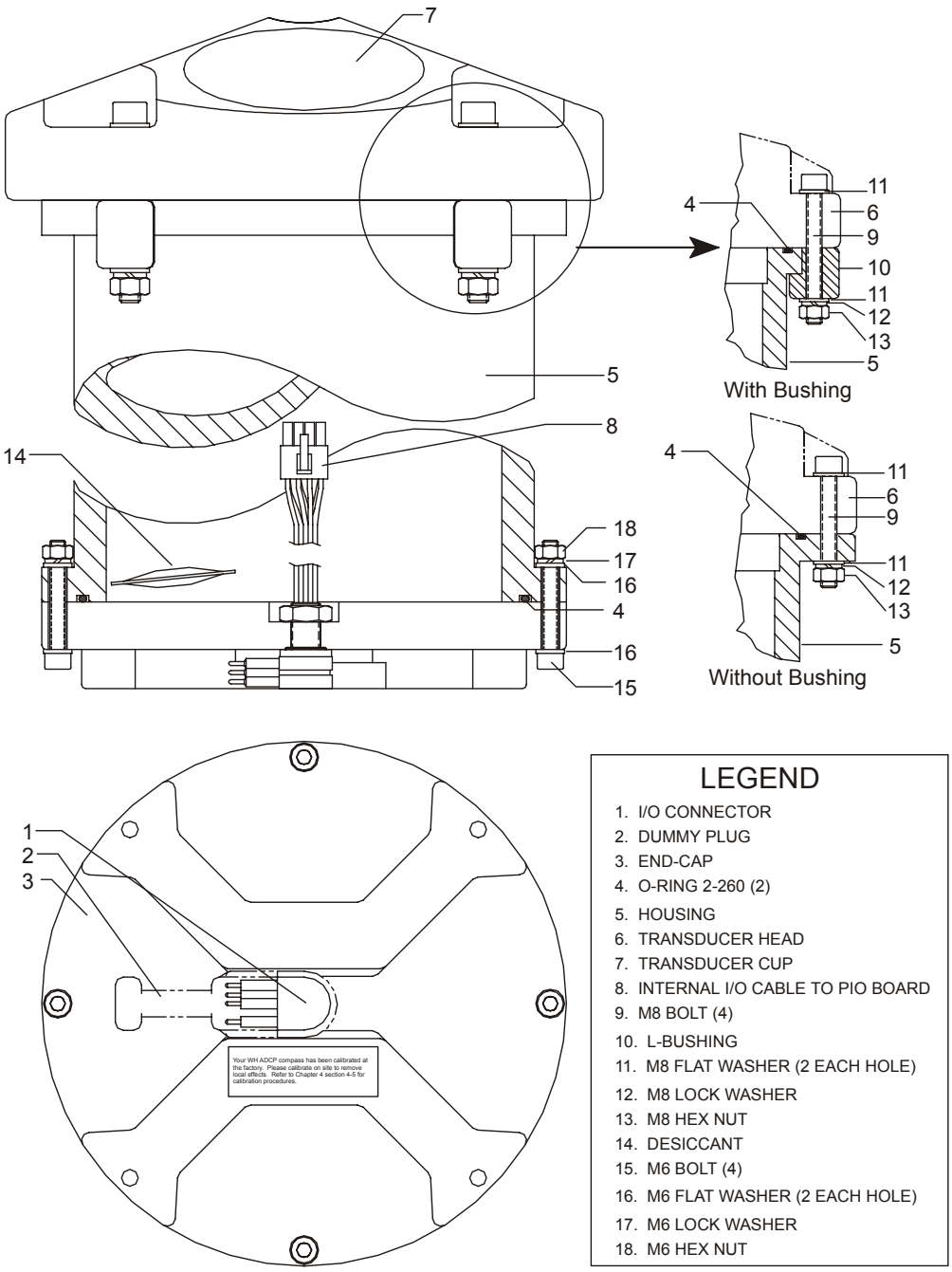

Figure 33. Mariner/Monitor and Rio Grande Parts Location (200 and 500 Meter Systems)

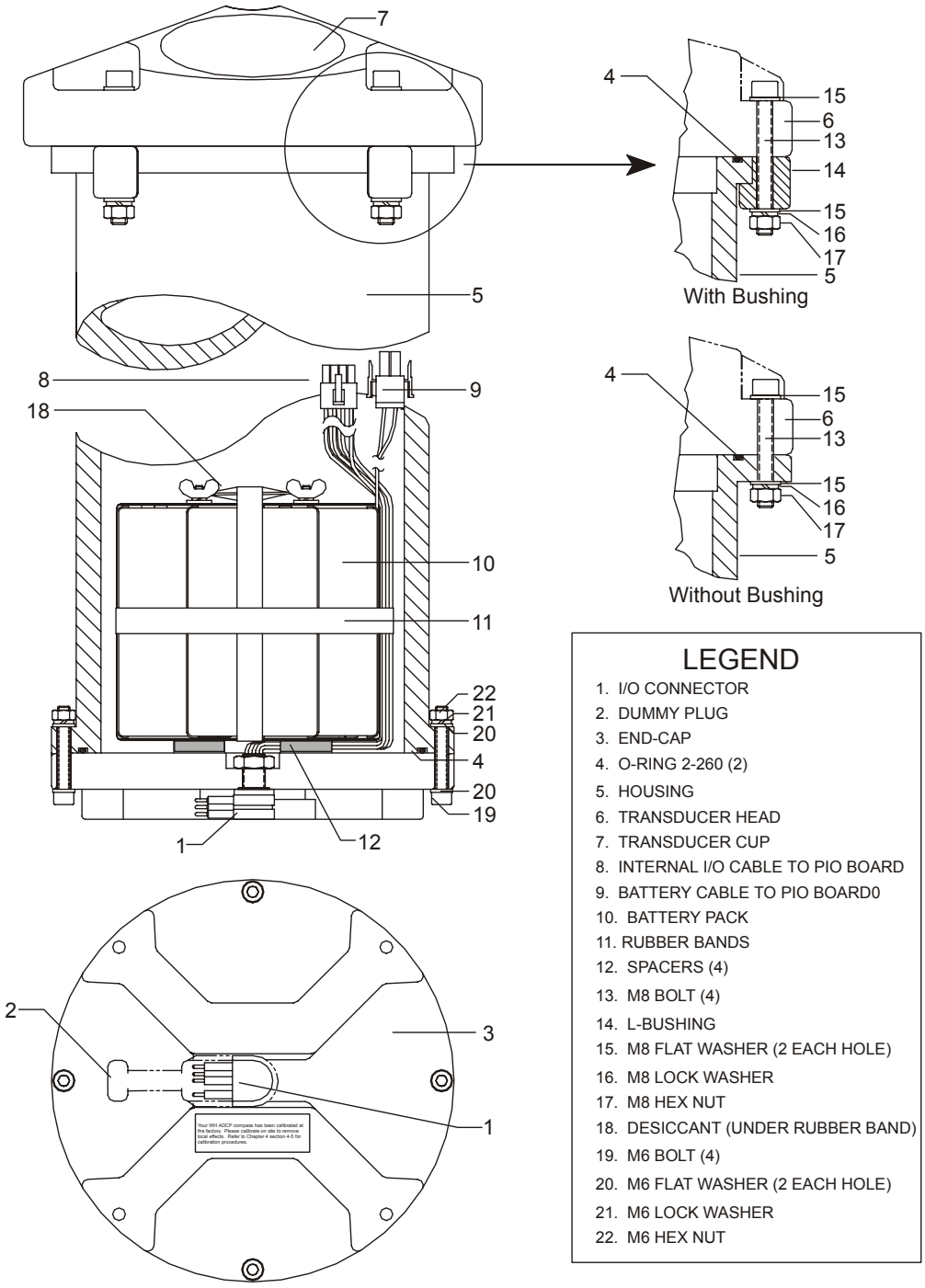

Figure 34. Sentinel Parts Location (200 and 500 Meter Systems)

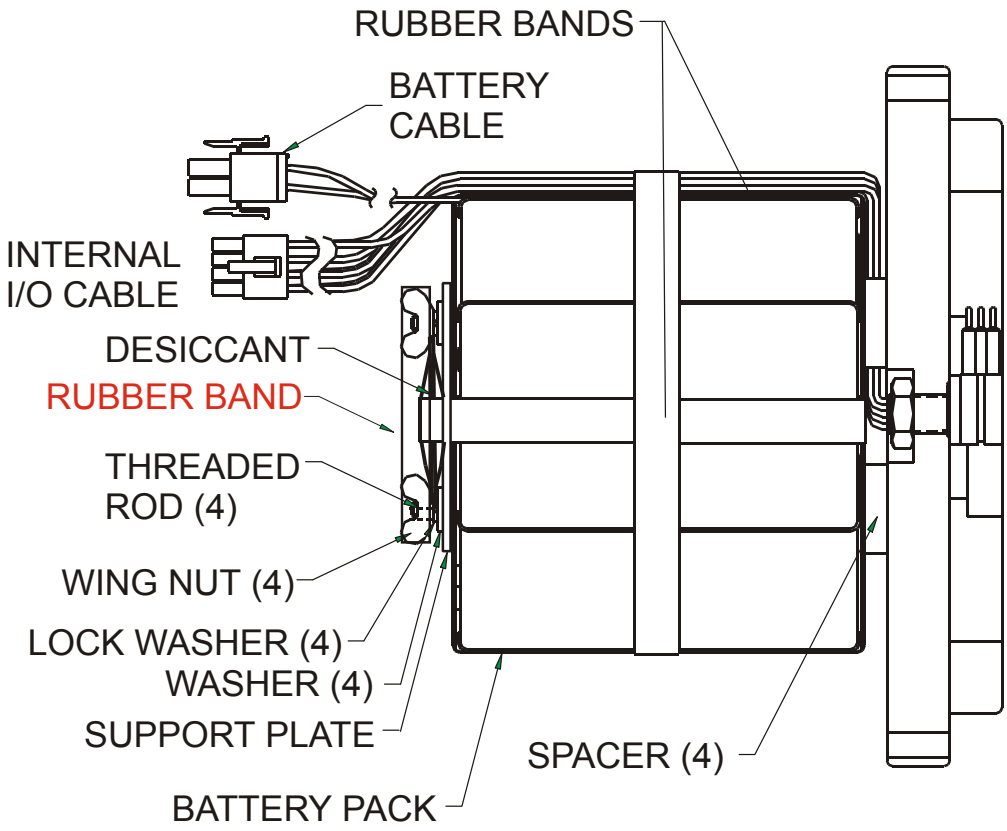

Figure 35. Sentinel End-cap and Battery Pack Parts Location

CAUTION. The Workhorse Sentinel battery packs are held in place by four sets of washers, lock washers, and wing nuts. If the wing nuts are not tight, the assembly of washers and wing nut can become loose and eventually fall onto the PIO board. **This has caused the PIO board to short out.** Place a rubber band around the four wing nuts to help hold them in place.

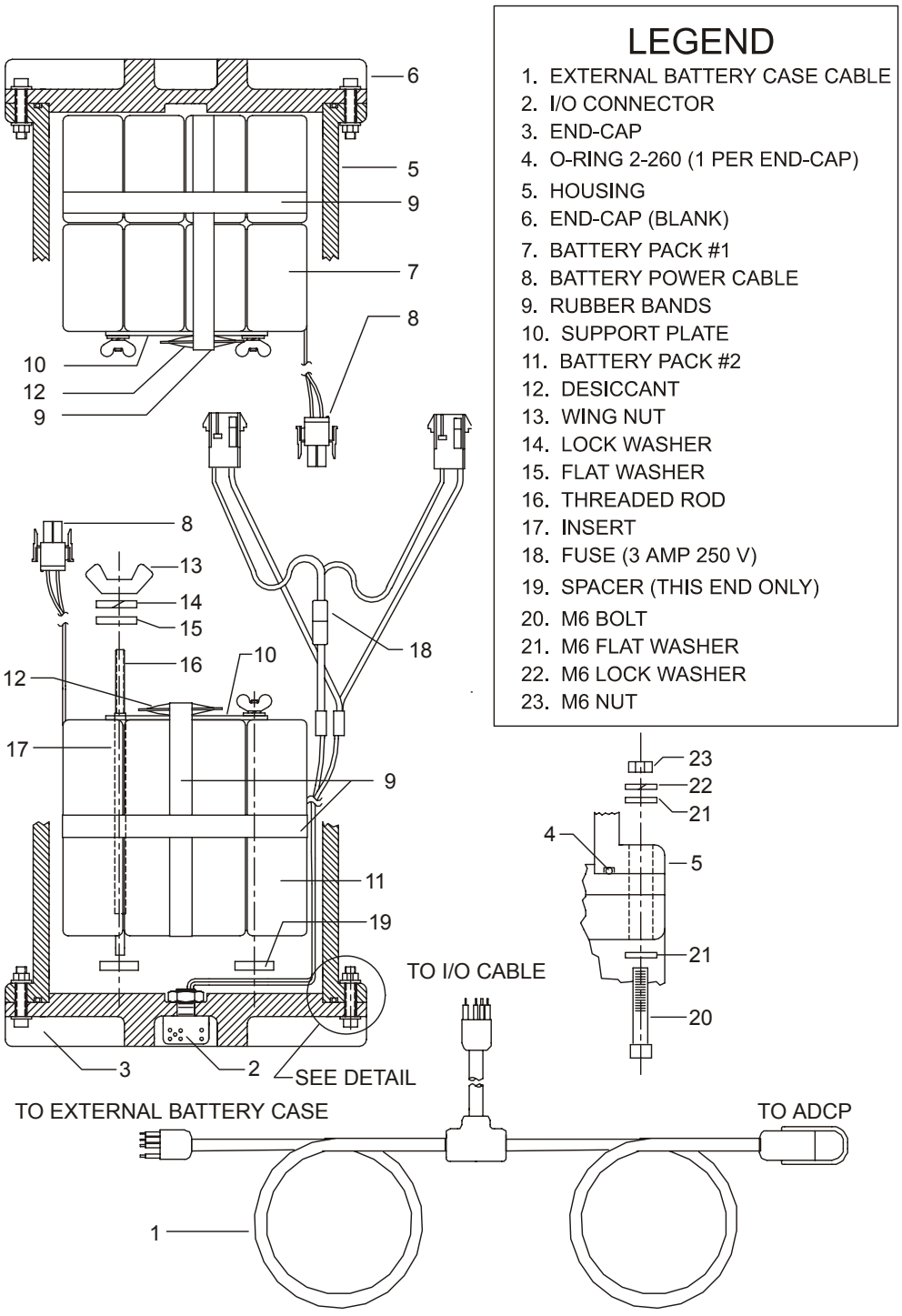

Figure 36. External Battery Pack Parts Location

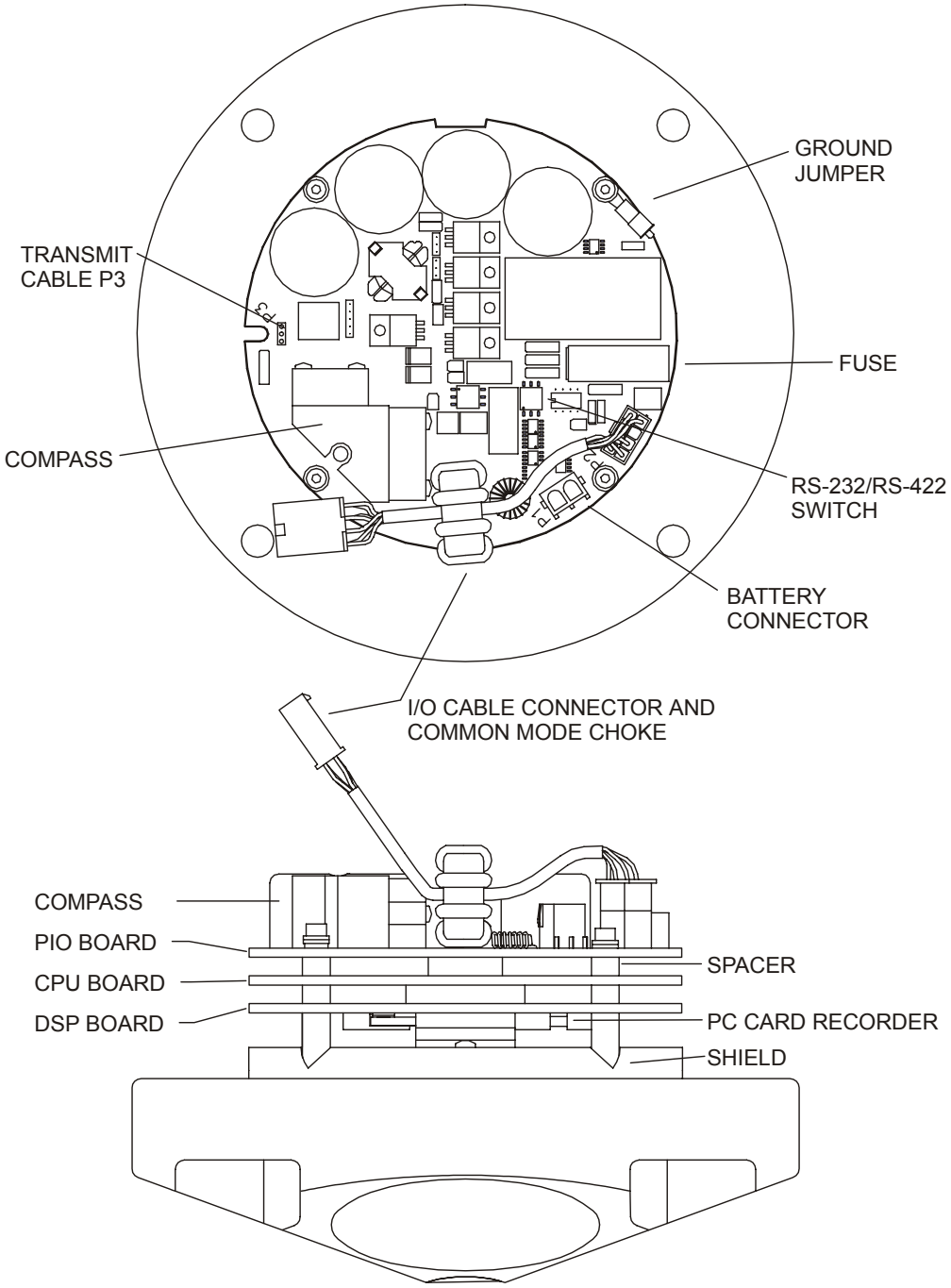

Figure 37. Workhorse Board Locations

3.21 High Pressure Housings

The high pressure housing upgrade allows you to deploy the ADCP in depths of 500, 1000, 3000, and 6000 meters. The "Outline Installation Drawings," page 159 shows the dimensions and weights for all of the systems.

This section includes information on installation, removal, and maintenance items for the high-pressure housing only.

3.21.1 High-Pressure Housing Disassembly

This section explains how to remove and replace the high-pressure end-cap or transducer head to gain access to the ADCP's electronics, batteries, and internal recorder. Read all instructions before doing the required actions.

High-Pressure End-Cap Removal Procedures

To remove the end-cap, do the following steps. Use "High-Pressure Parts Location Drawings," page 93 for parts identification.

NOTE. When you need access to the electronics, RDI recommends removing the transducer head assembly (see "High-Pressure End-Cap Removal Procedures," page 83).

NOTE. The 3000 and 6000 meter housing is one piece. Follow the "High-Pressure Transducer Head Assembly Removal," page 84 to remove the housing.

a. Dry the outside of the Workhorse.

b. Stand the Workhorse on its transducer face on a soft pad.

c. Remove all power to the Workhorse.

d. Remove the I/O cable and place the dummy plug on the I/O cable connector (see "I/O Cable and Dummy Plug," page 43).

CAUTION. If the ADCP flooded with batteries installed, there may be gas under pressure inside the housing. As a precaution, loosen the four end-cap bolts (6-mm) to vent the system.

a. Loosen (do not remove) the four end-cap bolts to vent the system.

b. Once all four end-cap bolts (6-mm) have been loosened, remove the bolts from the end-cap.

NOTE. Make sure you save all hardware removed during this procedure for re-assembly.

e. Carefully pull the end-cap away from the housing until you can gain access to the connector jack on the common mode choke. Use care; the

plastic mating surfaces scratch easily. Do not damage the mating surfaces.

f. Squeeze the sides of the internal I/O cable connector to release it from the common mode choke jack. Set the end-cap aside.

g. Remove any water from the end-cap O-ring grooves with a soft, lint-free cloth. Clean the O-ring mating surfaces. Inspect the surfaces for damage. Even small scratches can cause leakage around the O-ring seal.

High-Pressure Transducer Head Assembly Removal

a. Remove all power to the Workhorse.

b. Remove the I/O cable and place the dummy plug on the I/O cable connector (see "I/O Cable and Dummy Plug," page 43).

c. Stand the Workhorse on its end-cap.

CAUTION. If the ADCP flooded with batteries installed, there may be gas under pressure inside the housing. As a precaution, loosen the four bolts (8-mm) to vent the system.

a. Loosen (do not remove) the four bolts (8-mm) that attach the housing flange to the transducer head assembly to vent the system.

b. Once all four bolts (8-mm) have been loosened, remove the bolts.

d. Carefully lift the transducer assembly straight up and away from the housing until you can gain access to the connector jack on the common mode choke. Use care; the plastic mating surfaces scratch easily. Do not damage the mating surfaces.

NOTE. The cable attached to the end cap is only long enough to disconnect the internal I/O cable. There is NOT enough cable to set the transducer down next to the Housing Assembly.

e. Squeeze the sides of the internal I/O cable connector to release it from the common mode choke jack. Set the end-cap assembly aside. Set the transducer assembly (transducer face down) on a soft pad.

f. Clean the O-ring mating surfaces with a soft, lint-free cloth. Inspect the surfaces for damage.

g. When you are ready to re-assemble the workhorse, see "High-Pressure Workhorse Re-assembly," page 85.

3.21.2 High-Pressure Workhorse Re-assembly

To replace the end-cap and transducer head, proceed as follows. Use the "High-Pressure Parts Location Drawings," page 93 for parts identification.

a. If you are sealing the Workhorse for a deployment, be sure you have done all appropriate maintenance items (see "Sealing the Workhorse for a Deployment," page 66).

b. Make sure all printed circuit boards, spacers, cables, and screws have been installed.

c. Install two fresh bags of desiccant just before closing the Workhorse (see "Desiccant Bags," page 65).

3.21.3 High-Pressure O-ring Inspection & Replacement

This section explains how to inspect/replace the Workhorse O-rings. A successful deployment depends on the condition of two O-rings and their retaining grooves. See "High-Pressure Parts Location Drawings," page 93 for the locations of the following O-rings. Read all instructions before doing the required actions.

500 meter housings

- Transducer assembly, face, 2-260
- End-cap assembly, face, 2-260

1000, 3000, and 6000 meter high pressure housings

- Transducer and end-cap assembly, bore 2-258
- Transducer and end-cap assembly, face 2-261
- Transducer assembly, backup O-ring, 8-258 N300-90

NOTE. The backup O-ring is installed on 1000, 3000, and 6000 meter high pressure housing systems in addition to the 2-258 bore o-ring on the transducer head assembly. Install the backup o-ring with the cupped side facing the 2-258 bore seal O-ring.

We strongly recommend replacing these O-rings whenever you disassemble the Workhorse. Inspecting and replacing the O-rings should be the last maintenance task done before sealing the Workhorse.

NOTE. We recommend you use new O-rings if you are preparing for a deployment.

a. Inspect the O-rings. When viewed with an unaided eye, the O-rings must be free of cuts, indentations, abrasions, foreign matter, and flow marks. The O-ring must be smooth and uniform in appearance. Defects must be less then 0.1 mm (0.004 in.).

CAUTION. If the O-ring appears compressed from prior use, replace it. **Weak or damaged O-rings will cause the ADCP to flood.**

b. Clean and inspect the O-ring grooves. Be sure the grooves are free of foreign matter, scratches, indentations, corrosion, and pitting. Run your fingernail across damaged areas. If you cannot feel the defect, the damage may be minor; otherwise, the damage may need repair.

CAUTION. Check the O-ring grooves thoroughly. **Any foreign matter in the O-ring grooves will cause the ADCP to flood.**

c. Lubricate the O-ring with a thin coat of DC-111 lubricant (Table 13, page 77, item 5). Apply the lubricant using latex gloves. Do not let loose fibers or lint stick to the O-ring. Fibers can provide a leakage path.

NOTE. RDI uses Dow Corning's silicone lube model number 111 but any type of silicone O-ring lube can be used.

CAUTION. Apply a **very thin** coat of silicone lube on the O-ring. Using too much silicone lube on the O-ring can be more harmful than using no O-ring lube at all.

d. The backup O-ring (see Figure 38, page 87) is installed in addition to the 2-258 bore O-ring on the transducer head assembly for 1000, 3000, and 6000-meter high-pressure systems only. Install the backup O-ring with the cupped side facing the 2-258 bore seal O-ring.

NOTE. During installation, do not cut or twist the O-ring. Never force O-rings over sharp corners, screw threads, keyways, slots, or other sharp edges.

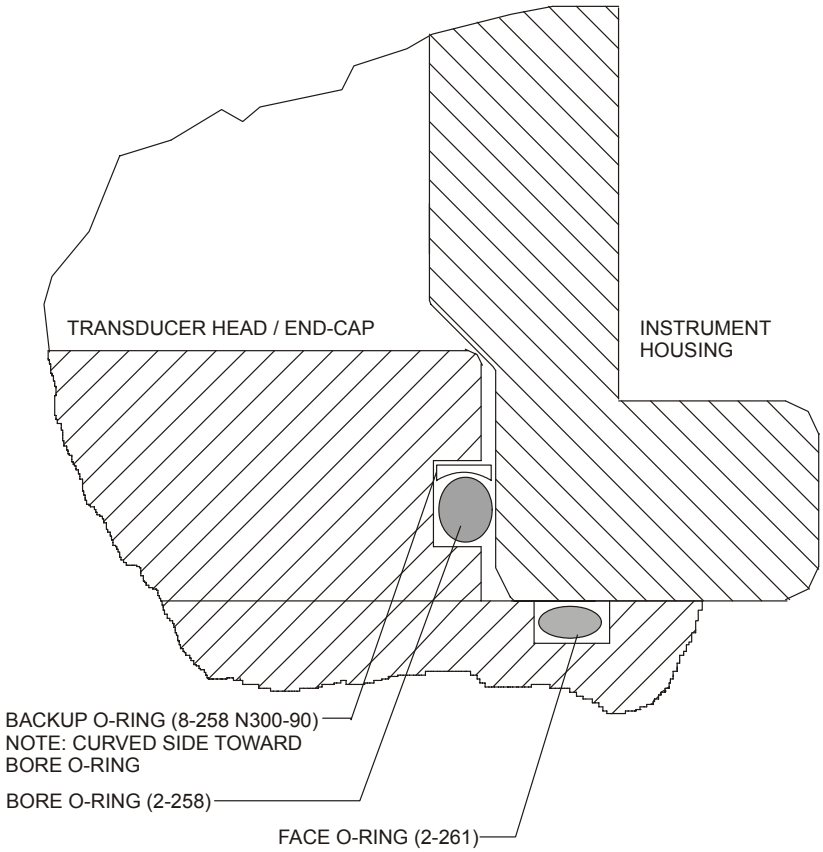

Figure 38. High Pressure O-Ring Detail View

High-Pressure End-cap Replacement

a. Stand the Workhorse on its transducer face on a soft pad.

b. Inspect, clean, and lubricate the face and bore O-rings on the end-cap. Apply a very thin coat of silicone lube on the O-rings.

NOTE. We recommend you use new O-rings if you are preparing for a deployment.

NOTE. RDI uses Dow Corning's silicone lube model number 111 but any type of silicone O-ring lube can be used.

CAUTION. Apply a **very thin** coat of silicone lube on the O-ring. Using too much silicone lube on the O-ring can be more harmful than using no O-ring lube at all.

c. Connect the internal I/O connector to the plug on the common mode choke.

d. Place the end-cap on the housing, aligning the mating holes and the beam 3 number embossed on the end-cap with the beam 3 number embossed on the transducer head. When mating the end-cap with the housing flange, try to apply equal pressure to all parts of the O-rings. Make sure the face and bore O-rings remain in the retaining groove.

CAUTION. Check that no wires or any other object is pinched between the end-cap and the housing. Use rubber bands to hold the wiring in place as necessary. **If the O-ring is not in the groove or if a wire or other object is pinched, the ADCP will flood.**

e. Examine the end-cap assembly nuts, bolts, and washers (6 mm) for corrosion; replace if necessary. The "High-Pressure Parts Location Drawings," page 93 shows the assembly order of the end-cap mounting hardware. All the hardware items are needed to seal the Workhorse properly.

f. Install all four sets of hardware until "finger-tight."

g. Tighten the bolts in small increments in a "cross" pattern until the split washer flattens out, and then tighten each bolt ¼ turn more to compress the face seal O-ring evenly. Tighten the bolts to the recommended torque value of 5.6 Newton-meters (50 pound-inches).

CAUTION. Apply equal pressure to the O-rings as you tighten the bolts. If one bolt is tightened more then the others, the O-rings can become pinched or torn. **Damaged O-rings will cause the system to flood.**

CAUTION. Do not over tighten the bolts that hold the transducer, housing, and end cap together. If you tighten too far, you can crack or break the plastic bushing. On the other hand, leaving the bolts too loose can cause the system to flood. **Tighten the hardware to the recommended torque value.**

NOTE. The recommended torque value for the end-cap 6-mm bolts is 5.6 Newton-meters (50 pound-inches).

High-Pressure Transducer Head Replacement

a. Stand the Workhorse on its end-cap.

b. Inspect, clean, and lubricate the O-rings on the transducer head flange. Apply a very thin coat of silicone lube on the O-ring.

NOTE. We recommend you use new O-rings if you are preparing for a deployment.

NOTE. RDI uses Dow Corning's silicone lube model number 111 but any type of silicone O-ring lube can be used.

CAUTION. Apply a **very thin** coat of silicone lube on the O-ring. Using too much silicone lube on the O-ring can be more harmful than using no O-ring lube at all.

c. Connect the internal I/O connector to the plug on the common mode choke.

d. Gently lower the transducer head/electronics assembly into the housing, aligning the mating holes and the beam 3 number embossed on the transducer head with the beam 3 number embossed on the end-cap. When mating the housing with the transducer head flange try to apply equal pressure to all parts of the O-rings. Make sure the face and bore O-rings remain in the retaining groove.

CAUTION. Check that no wires or any other object is pinched between the transducer head and the housing. Use rubber bands to hold the wiring in place as necessary. **If the O-ring is not in the groove or if a wire or other object is pinched, the ADCP will flood.**

e. Examine the transducer assembly nuts, bolts, and washers (8-mm) for corrosion; replace if necessary. The "High-Pressure Parts Location Drawings," page 93 shows the assembly order of the transducer mounting hardware. All hardware items are needed to seal the Workhorse properly.

f. Install all four sets of hardware until "finger tight."

g. Tighten the bolts in small increments in a "cross" pattern until the split washer flattens out, and then tighten each bolt ¼ turn more to compress the face seal O-ring evenly. Tighten the bolts to the recommended torque value of 9.6 Newton-meters (85 pound-inches). Do not deform the plastic bushings.

CAUTION. Apply equal pressure to the O-rings as you tighten the bolts. If one bolt is tightened more then the others, the O-rings can become pinched or torn. **Damaged O-rings will cause the system to flood.**

CAUTION. Do not over tighten the bolts that hold the transducer, housing, and end cap together. If you tighten too far, you can crack or break the plastic bushing. On the other hand, leaving the bolts too loose can cause the system to flood. **Tighten the hardware to the recommended torque value.**

NOTE. The recommended torque value for the transducer head 8-mm bolts is 9.6 Newton-meters (85 pound-inches).

3.21.4 Zinc Anode Inspection and Replacement

High-pressure systems have up to twelve sacrificial zinc anodes. If the ADCP does not have exposed bare metal, properly installed anodes help protect the ADCP from corrosion while deployed. Read all instructions before doing the required actions.

Zinc Anode Inspection

The life of a zinc anode is not predictable. An anode may last as long as one year, but dynamic sea conditions may reduce its life. Use a six-month period as a guide. If the total deployment time for the anodes has been six months or more, replace the anodes. If you expect the next deployment to last six months or more, replace the anodes. Inspect the anodes as follows.

a. Inspect the anodes on the transducer assembly, housing and end-cap for corrosion and pitting. If most of an anode still exists, you may not want to replace it.

b. Inspect the RTV-covered screws that fasten each anode. If the RTV has decayed enough to let water enter between the screws and the anode, replace the RTV.

c. If you have doubts about the condition of the anodes, remove and replace the anode.

Zinc Anode Electrical Continuity Check

Check electrical continuity using a digital multimeter (DMM). All measurements must be less than five ohms. If not, reinstall the affected anode.

End-Cap Anode. Measure the resistance between all four anodes. Scratch the surface of the anode with the DMM probe to make good contact if the anode is oxidized. The resistance should be less than five ohms.

Housing Anodes. Measure the resistance between all four anodes. Scratch the surface of the anode with the DMM probe to make good contact if the anode is oxidized. The resistance should be less than five ohms.

Transducer Anode. Remove the housing. Measure the resistance between the anode and any one of the four screws holding the PC boards to the transducer. The resistance should be less than five ohms.

Zinc Anode Replacement

The following steps explain how to remove and replace the zinc anode/s.

a. Remove the RTV from the anode screw heads. Remove the screws.

b. The anode may stick to the ADCP because of the RTV used during assembly. To break this bond, first place a block of wood on the edge of the anode to protect the housing anodizing and paint. Carefully strike the block to loosen the anode.

c. Clean the bonding area under the anode. Remove all foreign matter and corrosion. Apply a continuous 1-2 mm bead (0.04-0.08 in.) of RTV around each screw hole.

d. Set a new anode in place and fasten with new screws.

e. Fill the counter bore above each screw head with RTV. The RTV protects the screw heads from water and prevents breaking the electrical continuity between the anode, screw, and housing.

f. Check electrical continuity. If any measurement is greater than one ohm, reinstall the affected anode.

CAUTION.

1. Do not use zinc anodes with an iron content of more than 0.0015%. The major factor controlling the electrical current output characteristics of zinc in seawater is the corrosion film that forms on the surface of the zinc. Corrosion product films containing iron have a high electrical resistance. As little as 0.002% iron in zinc anodes degrades the performance of the anode.

2. Do not use magnesium anodes. Magnesium rapidly corrodes the aluminum housing.

3. Do not connect other metal to the ADCP. Other metals may cause corrosion damage. Use isolating bushings when mounting the ADCP to a metal structure.

3.21.5 Protective Coating Inspection and Repair

RDI uses paint on the housing for identification and corrosion protection. For more protection, the case and the transducer assembly are first anodized. Do not damage the surface coatings when handling the ADCP. Inspect and repair the protective coating as follows. Read all instructions before doing the required actions.

NOTE. The procedures contained in this section apply to our standard aluminum systems. For systems made of other materials, contact RDI.

a. Inspect the end-cap, housing, and transducer assemblies for corrosion, scratches, cracks, abrasions, paint blisters, exposed metal (silver-colored

aluminum), exposed anodize (black or dark green), and exposed primer (yellow). Be critical in your judgment; the useful life of the WorkHorse depends on it.

CAUTION. The chemicals used in the following steps can be hazardous to your health. Read all material safety data sheets and manufacturer's instructions before handling these chemicals.

b. If you are familiar with the repair of anodized coatings, proceed as follows; otherwise, send the WorkHorse to RDI for repair.

   1. Clean and prepare the damaged area using a fine-grade abrasive cloth or a fine-grade abrasive silicon carbide wheel. Remove all corrosion from the bare aluminum.
   2. Clean the area with trichlorethane or alcohol. Do not touch the area after cleaning.
   3. Anodize per MIL-A-8625, Type 3, Class 1.
   4. Seal with sodium dichromate only.
   5. Paint repaired area as described in step c below.

c. Proceed as follows to repair or touch up the protective paint.

   1. Remove all loose paint without damaging the anodizing. Clean and prepare the damaged area using a fine-grade abrasive cloth. Feather the edges of the paint near the damaged area. Try to have a smooth transition between the paint and the damaged area. Do not sand the anodized area. If you damage the anodizing, see step b above for repair.
   2. Clean the area with trichlorethane or alcohol. Do not touch the area after cleaning.
   3. Paint with one coat of epoxy primer (manufacturer's part number 4500; see note below).
   4. Paint with one coat of orange or black paint (manufacturer's part number 4512-B (orange), 4511-B (black); see note below).

NOTE. RDI uses two-part epoxy type paint. This paint is manufactured by Pro-line Paint Manufacturing company, 2426 Main St., San Diego, CA, 92113, Telephone: (619) 231-2313; or 1168 Harbor, Long Beach, CA, 98813, Telephone: (213) 432-7961. Manufacturer's part numbers:

4500-A, Pro-thane Paint, Catalyst, Part A
4511-B, Pro-thane Paint, Black, Part B
4512-B, Pro-thane Paint, Orange, Part B

3.21.6 High-Pressure Systems Spare Parts

Table 14: High-Pressure Systems Spare Parts

Description	Vendor	Part #
O-ring, face seal, 2-261, EPDM, Duro	Cal State Seal (619-224-2007)	2-260, EPDM, Duro 70, Parker
O-ring, bore seal, 2-258, EPDM, Duro	Cal State Seal	2-258, EPDM, Duro 70, Parker
O-ring, 8-258 N300-90, PARBAK	Cal State Seal	2-258, PARBAK
Bushing, L	RDI	811-4007-00
M8 Bushing, plastic isolation	Use local vendor	

3.21.7 High-Pressure Parts Location Drawings

Use the following figures to identify parts used on your high-pressure WorkHorse ADCP.

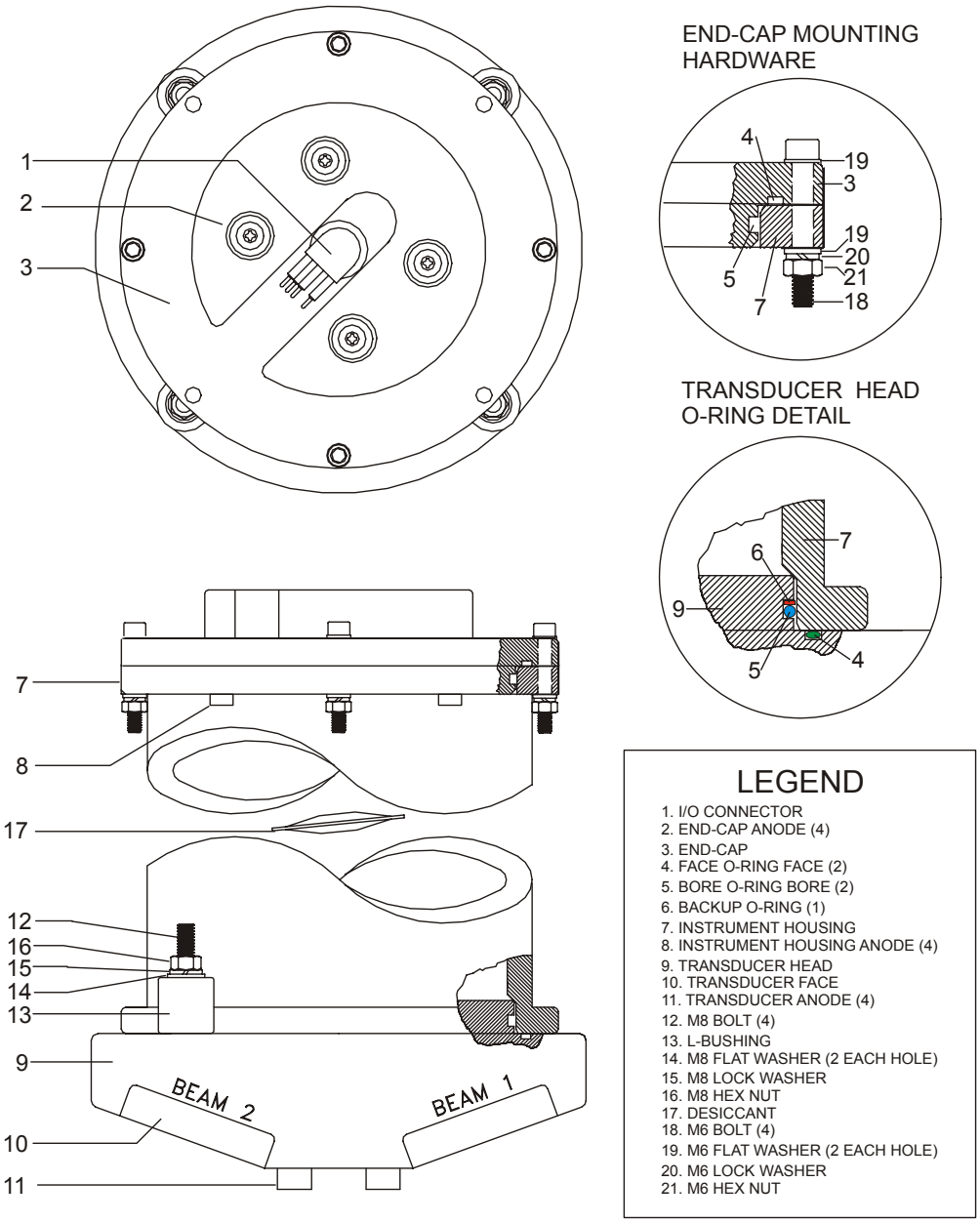

Figure 39. 1000 meter WorkHorse Parts Location

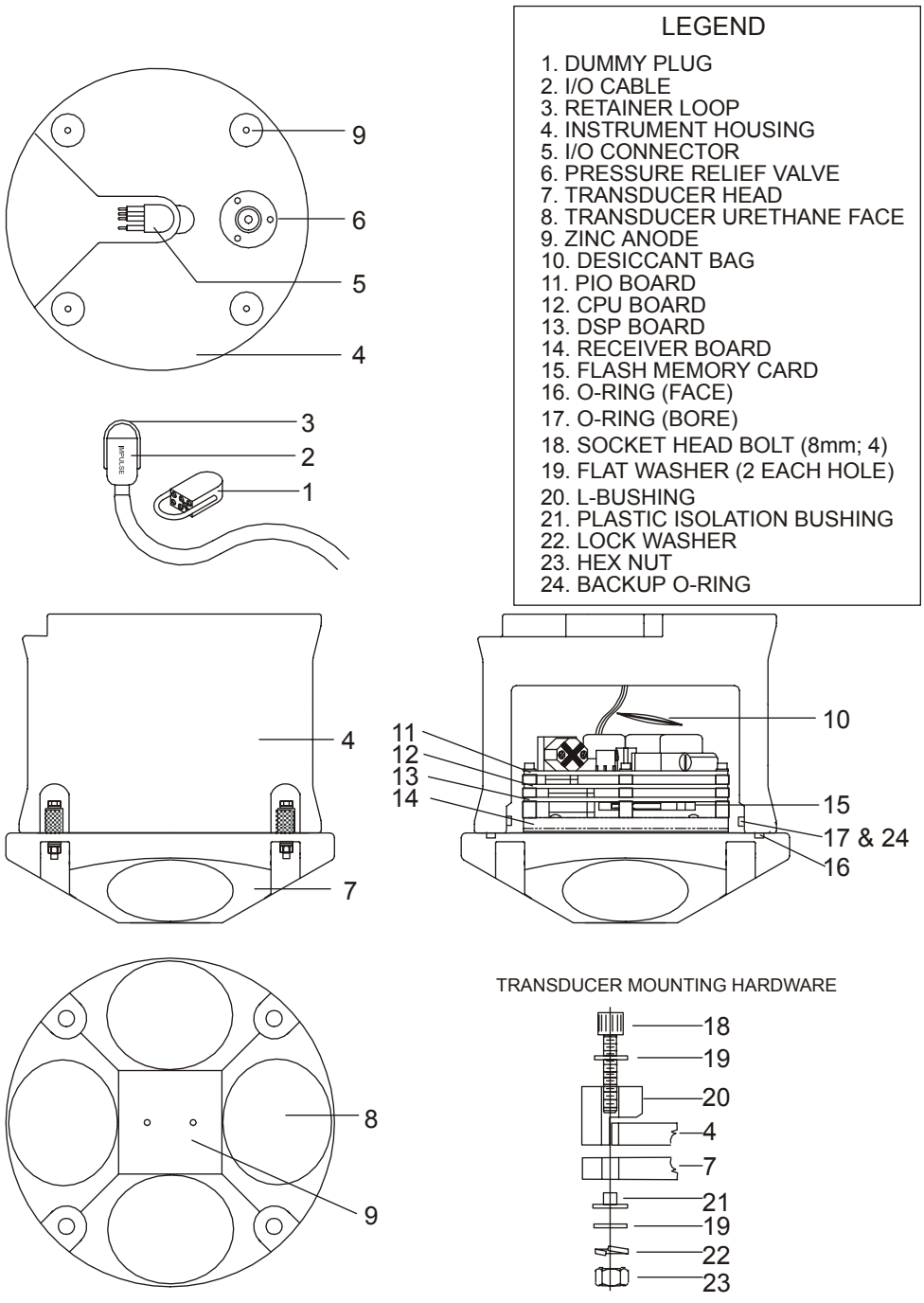

Figure 40. 3000 and 6000 meter WorkHorse Parts Location

4 Testing the WorkHorse

This chapter explains how to test the Workhorse using the *WinSC* and *BBTalk* programs. These tests thoroughly check the Workhorse in a laboratory environment, but are no substitute for a practice deployment. You should test the Workhorse:

- When you first receive the Workhorse.
- Before each deployment or every six months.
- When you suspect instrument problems.
- After each deployment.

These test procedures assume all equipment is working. The tests can help you isolate problems to a major functional area of the Workhorse. For troubleshooting information, see "Troubleshooting," page 116.

NOTE. For stationary deployments, the *WinSC* or *BBTalk* tests are the only tests required to verify the ADCP is operating correctly. When the ADCP is mounted to a moving vessel, use the Dock Side tests and the Sea Acceptance tests.

NOTE. When an addition or correction to the manual is needed, an Interim Change Notice (ICN) will be posted to our web site on the Customer Service page (www.rdinstrument.com). Please check our web site often.

4.1 Testing the WorkHorse with *WinSC*

Use the following steps to test the ADCP.

NOTE. For stationary deployments, the *WinSC* or *BBTalk* tests are the only tests required to verify the ADCP is operating correctly. When the ADCP is mounted to a moving vessel, use the Dock Side test and the Sea Acceptance tests.

a. Connect and power up the ADCP as shown in the appropriate ADCP User's Guide.

b. Start *WinSC* (for help on using *WinSC*, see the *WinSC* User's Guide).

c. At the **Welcome** screen, click **Test an ADCP**. Click **OK**. This will run the pre-deployment tests Deploy?, System?, TS?, PS0, PA, PC2, RS, and PC1-commands. The results of the tests will be printed to the screen and saved to the log file (*.scl).

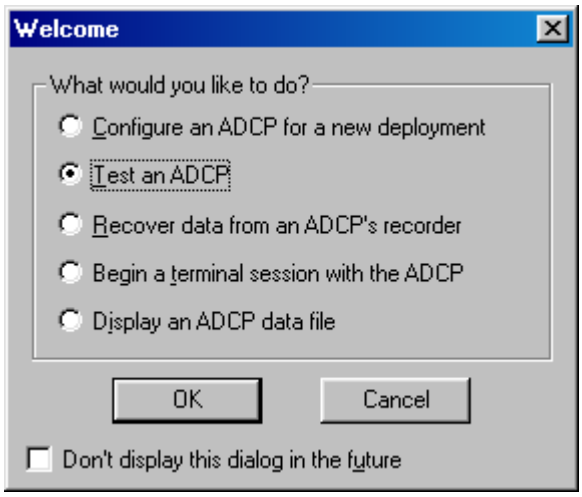

Figure 41. Using WinSC to Test an ADCP

4.2 Testing the WorkHorse with *BBTalk*

Use the following steps to test the ADCP.

NOTE. For stationary deployments, the *WinSC* or *BBTalk* tests are the only tests required to verify the ADCP is operating correctly. When the ADCP is mounted to a moving vessel, use the Dock Side test and the Sea Acceptance tests.

e. Interconnect and apply power to the system as described in the appropriate ADCP User's Guide.

f. Start the *BBTalk* program (for help on using *BBTalk*, see the RDI Tools User's Guide).

g. Press **<F2>** and run the script file TestWH.rds. The TestWH.rds script file runs PS0, PS3, PA, PC2, and the PC1 tests. The results of the tests will be printed to the screen and saved to the log file WH_RSLTS.txt. The WH_RSLTS.txt file will be created in the same directory that *BBTalk* is running from.

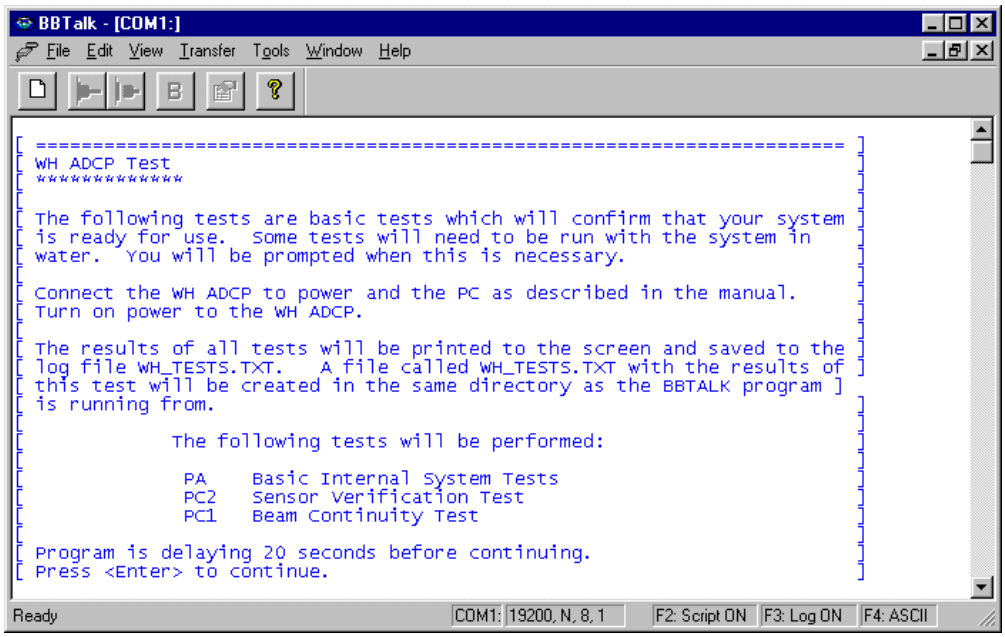

Figure 42. Using BBTalk to Test an ADCP

4.3 Test Results

This section shows an example of the test result printout after running the *WinSC* tests or the *BBTalk* script file TestWH.rds.

NOTE. The built-in tests require you to immerse the transducer faces in water. If you do not, some of the tests may fail. Running the tests in air will not harm the ADCP.

4.3.1 Deploy Commands List

WinSC sends the ADCP the Deploy? command. This will show a list of the deployment commands and their current setting. For example;

```
deploy?
Deployment Commands:
RE ----------------------- Recorder ErAsE
RN ----------------------- Set Deployment Name

WD = 111 100 000 --------- Data Out (Vel,Cor,Amp; PG,St,P0; P1,P2,P3)
WF = 0088 ---------------- Blank After Transmit (cm)
WN = 030 ----------------- Number of depth cells (1-128)
WP = 00045 --------------- Pings per Ensemble (0-16384)
WS = 0200 ---------------- Depth Cell Size (cm)
WV = 175 ----------------- Mode 1 Ambiguity Vel (cm/s radial)

BP = 000 ----------------- Bottom Track Pings per Ensemble

TE = 01:00:00.00 --------- Time per Ensemble (hrs:min:sec.sec/100)
TF = **/**/**,**:**:** --- Time of First Ping (yr/mon/day,hour:min:sec)
TP = 01:20.00 ------------ Time per Ping (min:sec.sec/100)
TS = 94/01/30,00:11:17 --- Time Set (yr/mon/day,hour:min:sec)

EA = +00000 -------------- Heading Alignment (1/100 deg)
```

```
EB = +00000 -------------- Heading Bias (1/100 deg)
ED = 00000 --------------- Transducer Depth (0 - 65535 dm)
ES = 35 ------------------ Salinity (0-40 pp thousand)
EX = 11111 --------------- Coord Transform (Xform: Type,Tilts,3 Bm,Map)
EZ = 1111101 ------------- Sensor Source (C,D,H,P,R,S,T)

CF = 11111 --------------- Flow Ctrl (EnsCyc;PngCyc;Binry;Ser;Rec)
CK ----------------------- Keep Parameters as USER Defaults
CR # --------------------- Retrieve Parameters (0 = USER, 1 = FACTORY)
CS ----------------------- Start Deployment
```

4.3.2 System Commands List

WinSC sends the ADCP the System? command. This will show a list of the system commands and their current setting. For example;

```
>system?
System Control, Data Recovery and Testing Commands:
AC ----------------------- Output Active Fluxgate & Tilt Calibration data
AF ----------------------- Field calibrate to remove hard/soft iron error
AR ----------------------- Restore factory fluxgate calibration data
AX ----------------------- Examine compass performance
AZ ----------------------- Zero pressure reading

CB = 411 ----------------- Serial Port Control (Baud; Par; Stop)
CP # --------------------- Polled Mode (0 = NORMAL, 1 = POLLED)
CZ  ---------------------- Power Down Instrument

FC ----------------------- Clear Fault Log
FD ----------------------- Display Fault Log

OL ----------------------- Display Features List

PA ----------------------- Pre-Deployment Tests
PC1 ---------------------- Beam Continuity
PC2 ---------------------- Sensor Data
PS0 ---------------------- System Configuration
PS3 ---------------------- Transformation Matrices

RR ----------------------- Recorder Directory
RF ----------------------- Recorder Space used/free (bytes)
RY ----------------------- Upload Recorder Files to Host
```

4.3.3 Time Set

WinSC sends the ADCP the TS? command. This will show the current setting of the real time clock. For example;

```
>TS?
TS = 98/06/17,07:31:27 --- Time Set (yr/mon/day,hour:min:sec)
>
```

4.3.4 Recorder Free Space

WinSC sends the ADCP the RS command. This will show the amount of used and free recorder space in megabytes. For example;

```
>RS
RS = 000,010 --------- REC SPACE USED (MB), FREE (MB)
>
```

4.3.5 Display System Parameters

This tells the ADCP to display specific information about your ADCP. Both *WinSC* and *BBTalk* run this test. For example:

```
>ps0
  Instrument S/N:  0
       Frequency:  307200 HZ
   Configuration:  4 BEAM, JANUS
     Match Layer:  10
      Beam Angle:  20 DEGREES
    Beam Pattern:  CONVEX
     Orientation:  DOWN
       Sensor(s):  HEADING  TILT 1  TILT 2  DEPTH  TEMPERATURE  PRESSURE
Pressure Sens Coefficients:
              c3 = +0.000000E+00
              c2 = +0.000000E+00
              c1 = -2.500000E-03
          Offset = +0.000000E+00

Temp Sens Offset:  -0.20 degrees C

    CPU Firmware:  16.21
   Boot Code Ver:  Required:  1.13   Actual:  1.13
    DEMOD #1 Ver:  ad48, Type:  1f
    DEMOD #2 Ver:  ad48, Type:  1f
    PWRTIMG  Ver:  85d3, Type:   6
Board Serial Number Data:
   08  00 00 02 C9 20 A7  09 CPU727-2000-00H
   4D  00 00 00 D4 97 37  09 PIO727-3000-03C
>
```

Verify the information is consistent with what you know about the setup of your system. If PS0 does *not* list all your sensors, there is a problem with either the communications to the transducer or a problem with the receiver board.

4.3.6 Instrument Transformation Matrix

PS3 sends information about the transducer beams. Only the *BBTalk* script file TestWH.rds runs this test. The WorkHorse uses this information in its coordinate-transformation calculations; for example, the output may look like this:

```
ps3
Beam Width:   3.7 degrees

Beam     Elevation     Azimuth
  1         -70.14      269.72
  2         -70.10       89.72
  3         -69.99        0.28
  4         -70.01      180.28

Beam Directional Matrix (Down):
  0.3399    0.0017    0.9405    0.2414
 -0.3405   -0.0017    0.9403    0.2410
 -0.0017   -0.3424    0.9396   -0.2411
  0.0017    0.3420    0.9398   -0.2415

Instrument Transformation Matrix (Down):    Q14:
  1.4691   -1.4705    0.0078   -0.0067       24069  -24092     127    -109
 -0.0068    0.0078   -1.4618    1.4606        -111     127  -23950   23930
  0.2663    0.2657    0.2657    0.2661        4363    4354    4353    4359
```

```
  1.0367    1.0350   -1.0359   -1.0374       16985   16957  -16972  -16996
Beam Angle Corrections Are Loaded.
>
```

If the WorkHorse has beam angle errors, they are reflected in the instrument transformation matrix and the Beam Directional matrix. This matrix, when multiplied by the raw beam data gives currents in the *x*, *y*, *z*, and *e* directions.

4.3.7 Pre-deployment Test

This diagnostic test checks the major WorkHorse modules and signal paths. Both *WinSC* and *BBTalk* run this test. For example, the output may look like this:

```
>PA
PRE-DEPLOYMENT TESTS
CPU TESTS:
  RTC.....................................PASS
  RAM.....................................PASS
  ROM.....................................PASS
RECORDER TESTS:
  PC Card #0..............................DETECTED
    Card Detect...........................PASS
    Communication.........................PASS
    DOS Structure.........................PASS
    Sector Test (short)...................PASS
  PC Card #1..............................DETECTED
    Card Detect...........................PASS
    Communication.........................PASS
    DOS Structure.........................PASS
    Sector Test (short)...................PASS
DSP TESTS:
  Timing RAM..............................PASS
  Demod  RAM..............................PASS
  Demod  REG..............................PASS
  FIFOs...................................PASS
SYSTEM TESTS:
  XILINX Interrupts... IRQ3  IRQ3  IRQ3 ...PASS
  Receive Loop-Back.......................PASS
  Wide Bandwidth..........................PASS
  Narrow Bandwidth........................PASS
  RSSI Filter.............................PASS
  Transmit................................PASS
SENSOR TESTS:
  H/W Operation...........................PASS
```

4.3.8 Display Heading, Pitch, Roll, and Orientation

The PC2 test displays heading, pitch angle, roll angle, up/down orientation and attitude temperature in a repeating loop at approximately 0.5-sec update rate. Any key pressed exits this command and returns the user to the command prompt. Both *WinSC* and *BBTalk* run this test.

```
Press any key to quit sensor display ...
Heading   Pitch    Roll   Up/Down    Attitude Temp   Ambient Temp  Pressure
301.01°  -7.42°  -0.73°     Up          24.35°C        22.97°C        0.0 kPa
300.87°  -7.60°  -0.95°     Up          24.36°C        22.97°C        0.0 kPa
300.95°  -7.60°  -0.99°     Up          24.37°C        22.97°C        0.0 kPa
300.71°  -7.61°  -0.96°     Up          24.37°C        22.98°C        0.0 kPa
```

4.3.9 Beam Continuity

The PC1 tests the beam continuity by measuring the quiescent Receiver Signal Strength Indicator (RSSI) levels. There must be a change of more than 30 counts when the transducer face is rubbed. Both *WinSC* and *BBTalk* run this test.

```
BEAM CONTINUITY TEST
When prompted to do so, vigorously rub the selected
beam's face.
If a beam does not PASS the test, send any character to
the ADCP to automatically select the next beam.

Collecting Statistical Data...
  52  48  50  43

Rub Beam 1 = PASS
Rub Beam 2 = PASS
Rub Beam 3 = PASS
Rub Beam 4 = PASS
```

4.4 Dock Side Tests

The following checks should occur at Dock Side prior to performing the Sea Acceptance Tests. These tests will verify the WorkHorse ADCP is ready for the Sea Acceptance Tests and confirm the peripherals attached to the ADCP.

NOTE. These tests only apply to moving vessel deployments.

4.4.1 Dock Side Diagnostic Test

The following test will confirm the connection of the WorkHorse Deck box (Mariner) to the Transducer or WorkHorse to the computer.

Table 15: Dock Side Test Setup

Setup	Description
Platform/Vessel	The vessel should be tied to the dock or at anchor. The transducer should be in water. All other sonar devices and equipment should be turned off.
WorkHorse	Connect the ADCP as described in the appropriate ADCP User's Guide. The Gyro/Navigation connection may or may not be connected at this point.
Computer	The RDI *BBTalk* program should be running, communications port setting (F5) to match the connection to the PC and WorkHorse ADCP baud rate requirements (default 9600,N,8,1).

Use the following steps to interconnect the WorkHorse system and to place the ADCP in a known state.

a. Interconnect and apply power to the system as described in the appropriate ADCP User's Guide.

b. Start the *BBTalk* program.

c. Press **End** to wake up the ADCP. Send the PA command to the ADCP. See "Pre-deployment Test," page 101 for an example of the test result printout.

4.4.2 Dock Side Peripheral Tests

The WorkHorse requires (at minimum) input for heading (true north) and for position fixes (GPS). Additionally, the WorkHorse can make use of pitch and roll data to correct for the tilt.

Heading can be input directly to the WorkHorse deck box through an external synchro gyro or stepper gyro (Mariner only). Heading can also (or instead of) be input and combined with WorkHorse data in the computer software *VmDas*. This heading input is done through the communications port of the computer with the NMEA 0183 string $HDT or $HDG as specified in the **Transforms** tab in *VmDas*.

If the gyro connection is used for the heading input, then the Gyro Interface Board must be first configured to match the platform's gyro output. Follow the instructions in "Gyrocompass Interface Considerations," page 30 on how to setup the Gyro Interface Board.

Pitch and Roll data can be input directly to the Mariner deck box through an external synchro gyro. Pitch and Roll can also (or instead of) be input and combined with WorkHorse data in the computer software *VmDas*. This heading input is done through the communications port of the computer with the RDI proprietary NMEA string $PRDID.

Navigation data can only be combined with WorkHorse data in the computer software *VmDas*. This navigation input is done through the communications port of the computer with the NMEA proprietary strings $GGA and $VTG.

NOTE. See the VmDas User's Guide and/or the WinRiver User's Guide for help on integrating NMEA Devices.

Table 16: Dock Side Peripheral Tests Setup

Setup	Description
Platform/Vessel	The Gyro, Navigation, and Pitch/Roll sensors should be attached to the appropriate place on either the WorkHorse deck box or the computer communication port. The devices should be on and should stable (in the case of gyros this may require a spin up time of up to 12 hours).
WorkHorse	The WorkHorse should be connected as described in the appropriate ADCP User's Guide, AC Power connected to the deck box/ADCP, and the power switch turned on.
Computer	The RDI *BBTalk* program should be running, communications port setting (F5) to match the connection to the PC and WorkHorse ADCP baud rate requirements (default 9600,N,8,1).

Testing the Gyro Connections to the Deck box (Mariner Only)

The following sequence of commands should be sent after powering up the WorkHorse deck box. These commands will wake up the ADCP (<BREAK>), initialize the WorkHorse (CR1), and save the initialization (CK).

```
<BREAK> press the end key
CR1
CK
```

The following command should be sent to test the gyro input to the WorkHorse deck box.

```
PC2
```

The response from the ADCP should be as follows:

```
>PC2
Heading          Pitch      Roll        Temperature
 (ext)           (ext)      (ext)       cts      degs
 000.0           +00.0      +00.0       243E     23.9
```

Testing the Navigation Connections to the Compute (VmDas)r

Start *VmDas* in the Data Collect mode. On the **View** menu, select **NMEA Communications**. Confirm that the Navigation Device NMEA string is viewable and the $GGA string is present.

The **Navigation Data** window in *VmDas* (see Figure 43) shows a text box of the position and velocity data from a NMEA navigation device. You can use this to verify the navigation connections.

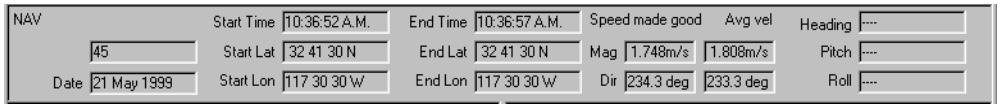

Figure 43. Testing the Navigation Connections

Testing $HDG Heading Connections to the Computer (VmDas)

Start *VmDas* in the Data Collect mode. On the **View** menu, select **Nmea Communications**. Confirm that the Navigation Device NMEA string is viewable and the $HDG string is present. Note that the data for this information may appear on the same communications port as the navigation data or on a separate input port.

Testing $PRDID Heading Connections to the Computer (VmDas)

Start *VmDas* in the Data Collect mode. On the **View** menu, select **Nmea Communications**. Confirm that the Navigation Device NMEA string is viewable and the $PRDID string is present. Note that the data for this information may appear on the same communications port as the navigation data or on a separate input port.

Testing the Navigation Connections to the Compute (WinRiver)r

Start *WinRiver* in the Acquire mode. On the **View** menu, select **Device Logs**. Confirm that the Navigation Device NMEA string is viewable and the $GGA string is present.

Table 17: Dock Side Peripheral Test Results

Test	Test Criterion
External Gyro Connection Test	Verify that the Gyro inputs for Heading, Pitch and Roll (if included) are reasonable for the platform's attitude. The Temperature reading should match the expected water temperature at the transducer.
External Heading NMEA Connection Test	Verify that the Navigation Device NMEA string is viewable and the $GGA string is present.
External Heading NMEA Connection Test	Verify that the Navigation Device NMEA string is viewable and the $HDT or $HDG string is present.
External Heading NMEA Connection Test	Confirm that the Navigation Device NMEA string is viewable and the $PRDID string is present.

4.5 Sea Acceptance Tests

This procedure is intended to test the WorkHorse at sea. This procedure assumes that the Dock Side Testing (see "Dock Side Tests," page 102) procedure has been run and that all of the items have passed or been confirmed to be operational. The following tests will not obtain favorable results unless all of this work has been performed.

NOTE. These tests only apply to blue water moving vessel deployments using *VmDas*. See the *VmDas* User's Guide for instructions on how to use this program.

Rio Grande ADCPs using *WinRiver* should view the *WinRiver* User's Guide for instructions on integrating GPS and depth sounders. You must perform the ADCP compass correction procedure.

The reason for Sea Acceptance Testing is that although the Dock Side Tests confirm the WorkHorse is operational, they do not confirm that the system is able to perform to its specifications. The performance of any ADCP relies greatly upon the installation into any platform. Therefore, the system must be tested at sea to understand the effects of the platform on the ADCP performance.

At Sea Testing includes tests for Acoustic Interference, Profiling Range, and Profiling Reasonableness testing. For each of these tests the following Equipment and ADCP setup requirements are recommended.

Equipment Required

- WorkHorse 300 kHz, 600 kHz, or 1200 kHz ADCP with firmware 16.xx or greater
- Computer
- *VmDas* Program
- *WinADCP* Program
- Navigation Interface Connected
- Heading Interface Connected

VmDas Setup

a. Start *VmDas*. On the **File** menu, click **Collect Data**. On the **Options** menu, click **Load**. Select the Default.ini file and click **Open**.

b. On the **Options** menu, click **Edit Data Options**. Click the **ADCP Setup** tab. Set the **Ensemble Time** to the **Ping as fast as possible**.

c. Select the **Use Command File** box. Use Table 18, page 107 to choose a command file for your ADCP, and load it into *VmDas* using the **Browse** button.

Table 18: Command Files

File Name	Description
WH300DEF.txt	Default setup for a WH 300 kHz ADCP to provide the most range with the optimal precision.
WH600DEF.txt	Default setup for a WH 600 kHz ADCP to provide the most range with the optimal precision.
WH1200DEF.txt	Default setup for a WH 1200 kHz ADCP to provide the most range with the optimal precision.

d. On the **Options** menu, click **Edit Data Options**. Click the **Averaging** tab. Set the **Short Term Average** to 300 seconds (5 minutes). Set the **Long Term Average** to 600 seconds (10 minutes).

4.5.1 Interference Test

The WorkHorse transmits and receives acoustic signals from the water. If other sonar devices are operating on the platform at the same time as the ADCP it is possible for those signals to bias the ADCP data. Therefore, all ADCPs must be tested to ensure that they are not receiving interference from other sonar equipment on board the vessel.

The following Interference Test will determine if there is interference from other devices on board the vessel.

Interference Test Platform Test Setup

This test requires that the platform be in water deeper than the ADCP's maximum expected profiling range. Use the following table to determine the minimum water depth required.

Table 19: Interference Test Minimum Water Depth Requirement

300 kHz ADCP	600 kHz ADCP	1200 kHz ADCP
400 meters	150 meters	60 meters

The platform speed for this test is drifting. The motors may be running if required for platform safety. The test sequence starts with ALL sonar and non-essential electronic equipment turned off. Only the ADCP should be on for the first test. This test establishes a base line for the interference and is critical to the rest of the tests. After a 10-minute period the first sonar device is turned on, transmission started, and the data is reviewed for interference terms. At the end of this 10-minute period the first sonar device is turned off and than the next sonar device is turned on and started pinging for 10 minutes. This process repeats for each of the sonar devices.

Interference Test Computer Screen Display Setup

View the RAW data (*.ENR files) being collected by the *VmDas* program in the *WinADCP* program contour plots for echo intensity data. This data will show the single ping return levels.

How to Identify Interference

If there is an interference term, the echo intensity data will show spurious echo intensity jobs. An example of what an interference term may look like what is shown in Figure 44.

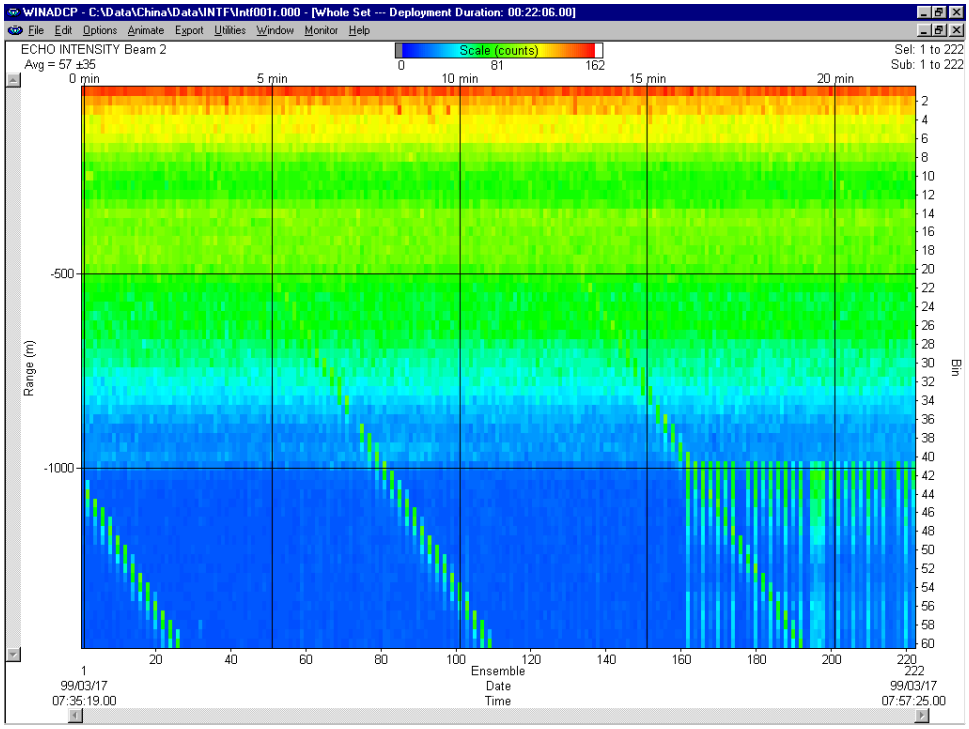

Figure 44. Interference Test

The interference term appears as the periodic green blocks in the data set. The interference is some what lost in the upper part of the profile however it can be seen clearly seen once the system reaches the noise floor (the point where signals are no longer being returned from the water).

NOTE. Interference terms such as above seen anywhere in the echo intensity profile data will result in a bias to the ADCP data.

4.5.2 Water Profile Range Test

The range of any ADCP is directly dependent on the level of backscattering material in the water, the transmit power into the water, the received sensitivity, and the level of the background noise. Each of these effects the range of the system in different ways, but in the end can result in reduced or extended range as follows.

- The ADCPs transmit power and receive sensitivity are fixed based on the transducer frequency. However, these may be affected by installation of an acoustic window in front of the transducer. A window will absorb both sound transmitted by the ADCP and the sound returned from backscatter in the water.
- The volume of the backscatter in the water will affect the range. All specifications for range assume that there is a certain amount of backscatter in the water. The backscatter volume is not controllable in any way.
- The background noise changes as the platform's speed increases or decreases. There are two types of noise created by the moving platform; first, there is the noise due to propeller and engines; and second, there is the noise created by the rushing water across the platform and ADCP transducer.

This test is used to determine the effects of the background noise on the range of the ADCP. This information can be used to determine the optimum speed of the platform to obtain the desired range required.

Water Profile Range Platform Test Setup

This test requires that the platform be in water deeper than the ADCP's maximum expected profiling range. Use the following table to determine the minimum water depth required.

Table 20: Water Profile Range Test Minimum Water Depth

300 kHz	600 kHz	1200 kHz
250 meters	100 meters	40 meters

The platform course for this test is a continuous straight line. The speed of the platform will be varied during this test. At each speed, the system will be set to collect data for a minimum of 10 minutes. The following table lists the recommended speeds.

Table 21: Water Profile Range Test Platform Speed

Test #	Speed
Speed 1	Drifting
Speed 2	3 knots
Speed 3	6 knots
Speed 4	9 knots
Speed 5	12 knots
Speed 6	Maximum Speed

Water Profile Range Computer Screen Display Setup

View the Tabular Display of the Long Term Average data (10 minute averages) in the *VmDas* program.

How to Determine the Maximum Range of the ADCP

The data collected in the long-term average (10 minutes) tabular display will be used to determine the maximum range of the ADCP. The maximum profiling range of the system is determined by locating the last valid bin and then using that ping to determine the range. To determine the last valid bin the following criterion is used:

- The last bin must be above the bottom side lobe area
- The bin must have a percent good value above 25%
- The correlation value for at least 3 beams must be above the threshold of 120 counts

Locate the last valid bin for each of the speeds and fill in the table below.

Platform Speed	Last Valid Bin Number	Range to Last Bin	Average RSSI Value at Last Bin

Notes:

- Platform Speed must be input as a measurement from the Bottom Track (if in range) or the GPS speed.

- Range to Last Bin is calculated as follows: ((bin size) * (last bin number)) + (NF command)
- Average RSSI Value at Last Bin is the average of the 4 beams RSSI values in the last bin number

The results from the above test should be compared to the specified nominal range of the system. Assuming that there are sufficient scatterers in the water, the acoustic window is not attenuating the signal, and that that the platform background noise is variable there should be a speed at which the nominal range of the system is obtained.

4.5.3 Ringing Test

The ADCP transmits an acoustic pulse into the water. The main lobe of this pulse bounces off particles in the water and the signals returned from these particles are used to calculate the velocity of the water. The main lobe of the transmitted pulse is what we are using to process and calculate a velocity. The transmitted pulse, however, is made up of many side lobes off the main lobe. These side lobes will come in contact with metal of the transducer beam itself and other items in the water.

The energy from the side lobes will excite the metal of the transducer and anything bolted to the transducer. This causes the transducer and anything attached to it to resonate at the system's transmit frequency. We refer to this as "ringing." If the ADCP is in its receive mode while the transducer is ringing then it will receive both the return signals from the water and the "ringing." Both of these signals are then processed by the ADCP. The ringing causes bias to the velocity data.

All ADCPs "ring" for some amount of time. Therefore, each ADCP requires a blanking period (time of no data processing) to keep from processing the ringing energy. Each ADCP frequency has a different typical ringing duration. A blanking period (time of not processing data) is required at the beginning of each profile. The blanking distances required for the typical ringing period for each WorkHorse frequency is shown in the following table.

Table 22: Required Blanking Distance

Frequency	Typical Blank Period for Ringing
300kHz	2 meters
600kHz	1 meters
1200kHz	0.5 meters

Ringing will bias the velocity estimation to a lower value than it should be. However, when the platform motion is removed from the water profile data

it will appear as a large velocity, which is the opposite of what it is really doing. This effect is caused because the vessel motion portion of the water profile data has been biased low.

Ringing Test Platform Test Setup

The key to success on this test is that the water velocity and direction not change over the entire test period of 120 minutes. This may be difficult to adhere to in regions with large tidal effects. The test requires that the platform be within the ADCP bottom tracking range so that valid bottom track can be used. Use the following table to determine the optimum water depth range required.

Table 23: Ringing Test Water Depth Requirement

300kHz ADCP	600kHz ADCP	1200kHz ADCP
100-200 meters	50-100 meters	10-20 meters

Platform speed should be held to as fast a speed as possible without loosing any bottom tracking data for a period of 30 minutes. Typically, this will be a speed of 6-9 knots. Some experimentation may be required to find the maximum bottom track speed for the given depths above.

Ringing Test Computer Screen Display Setup

The Magnitude and Direction Profile Display of the Long Term Average data (10 minute averages) will be viewed in the *VmDas* program.

How to Determine the Ringing Test Results

Viewing the Long Term average of the magnitude and direction profile data, look for unreasonable shears from bin 1 to bin 2 to bin 3 and so on. If an unreasonable shear is seen, this is most likely ringing and your blanking needs to be increased by the following formula:

(bin size) * (last bin number with ringing) * 0.80

*The total blanking period is typical blanking period plus the increased blanking period required. The above value should be used to change both the NF and WF commands in all configuration files for this ADCP.

4.5.4 Water Profile Reasonableness Test

The mounting alignment of the WorkHorse transducer to the relative position of the heading input from the vessel is critical in the velocity estimates made by the ADCP. If either of these are not known and corrected for, it will result in both directional and velocity estimate errors in the water velocity data.

It is possible to confirm if the transducer alignment is correct by collecting data over the same water in several different directions. If the transducer is properly aligned, then both the magnitude and direction of the currents will appear the same in all directions that the platform travels.

Water Profile Reasonableness Platform Test Setup

The key to success on this test is that the water velocity and direction not change over the entire test period of 120 minutes. This may be difficult to adhere to in regions with large tidal effects. The test requires that the platform be within the ADCP bottom tracking range so that valid bottom track can be used. Use the following table to determine the optimum water depth range required.

Table 24: Water Profile Reasonableness Water Depth Requirement

300 kHz	600 kHz	1200 kHz
100-200 meters	50-90 meters	10-40 meters

Platform speed is held at a constant 5 knots during the entire course. The course for this test contains 4 legs. Each leg must be approximately 4500 meters (except for leg 2 which will be one half the length of each of the other legs). The course will appear as shown in Figure 45. The actual starting direction is not critical as long as the course completes the pattern shown in Figure 45.

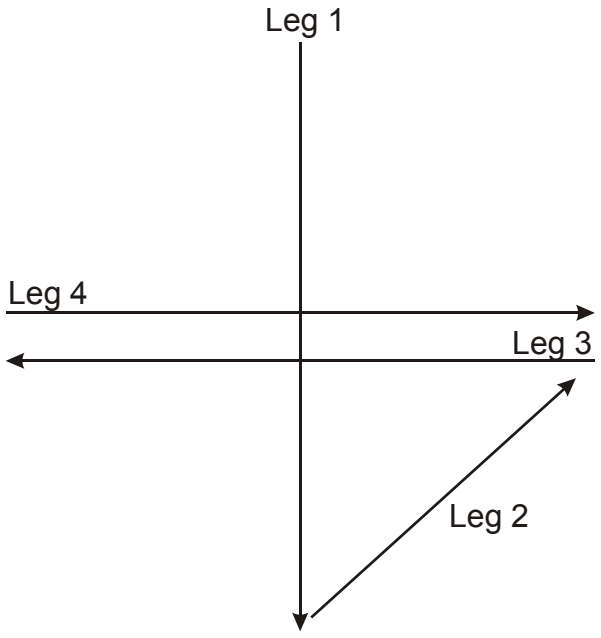

Figure 45. Water Profile Reasonableness Course

Water Profile Reasonableness Display Setup

View the *VmDas* Ship Track display of bin 3 with the bottom track reference. The Short Term Average (5 minute averages) data should be viewed.

How to Determine Water Profile Reasonableness

A pass condition is if the velocities in each of the ship track plotted directions has reasonably the same magnitude and direction. It is common to see some wild velocity magnitude and directions during turns. This happens as a result of the effects of the turn on the gyro heading device or the latency of the heading updates for a GPS heading input.

If the direction of the currents is not the same in each of the four directions, then it will be necessary to enter in a transducer misalignment angle. Changing the transducer alignment angle and playing back the same data file again allows you to determine the misalignment angle. The best way to perform this check out is to use incremental change of 5-10 degrees at a time.

Assuming that the misalignment angle was not required or could be determined, it is now possible to use the same data just collected to determine how reasonable the navigation data input is. Change the data display reference from bottom track to the navigation data in the *VmDas* program. There should be little to no change in the velocity magnitude and direction if the navigation data is a valid input for a reference.

4.5.5 Bottom Tracking Test

The bottom tracking capability of the ADCP varies depending on the type of bottom (hard, soft, rock, sand, etc.), the slope of the bottom, and the speed of the vessel (background noise).

Before testing the Bottom Track capabilities, the Water Profiling Range Test must be performed. Through the results of this test, determine the platform speed in which the range to the last valid bin obtained the specified nominal range of the ADCP frequency being used.

If it was not possible to reach the specified nominal range during the Water Profiling Range test, then determine the speed at which it allowed the best range possible. Calculate the percentage of the nominal range that was obtained by the system.

Bottom Tracking Platform Test Setup

The key to this test is to operate the system in an area where both the minimum and maximum bottom tracking range can be obtained. The platform will travel over water that is very shallow (<10 meters) to very deep (greater than the maximum bottom track range). It does not matter if the water starts deep and goes shallow or vice-versa.

The course of the platform should be a relatively straight line. The platform speed should be no greater than the velocity recorded in the Water Profiling Range Test.

Bottom Tracking Computer Screen Display Setup

View the raw data display of the *VmDas* bottom track display window.

How to Determine Bottom Tracking Reasonableness

Viewing the bottom track velocity data, record the maximum and minimum average of the bottom track depths in the table below.

Beam Number	Minimum Depth (meters)	Maximum Depth (meters)
Beam 1		
Beam 2		
Beam 3		
Beam 4		

A pass condition is if the maximum depth of the system is equal to the specification for the nominal bottom track range.

NOTE. If the system was not able to water profile to the nominal range, then the bottom track range should be reduced to no more than the same percentage as the water profile loss.

If the Bottom Track **did** obtain the complete range and the Water Profile **did not**, then it is likely that there is insufficient backscatter in the water to obtain the specified range.

5 Troubleshooting

Considering the complexity of the WorkHorse, we have provided as much information as practical for field repair; *fault location to the component level is beyond the scope of these instructions*. The provided information assumes that faults are isolated with a large degree of certainty to a Least Replaceable Assembly (LRA) level only. The time to repair the system will be minimized if an entire replacement unit is available in the field. If time to repair is of essence, RD Instruments strongly advises the availability of the listed LRAs.

NOTE. When an addition or correction to the manual is needed, an Interim Change Notice (ICN) will be posted to our web site on the Customer Service page (www.rdinstrument.com). Please check our web site often.

Table 25: List of Least Replaceable Assemblies

LRA	Description
ADCP	The entire ADCP; includes the electronics, housing, transducer ceramic assemblies, and end-cap.
Deck Box (Mariner only)	The Deck Box contains all electronics necessary to supply power, provide user communication and gyro interface.
I/O Cable	Connects the ADCP with the Deck Box (Mariner) or Computer.
Serial Cable	Connects the Mariner Deck Box to the computer.
End-Cap	Includes the end-cap, connector, and internal I/O cable.
ADCP electronics	The spare boards kit Includes the PIO, CPU, and DSP boards.
PC Card	Replaceable PC recorder card.

Since these Least Replaceable Assemblies are manufactured in different configurations, please contact RD Instruments (see "Technical Support," page 134 for contact information) to obtain the correct part number for your specific system configuration. When contacting RD Instruments about a replacement assembly, please provide the serial numbers of the ADCP and Deck Box. If you want to replace the I/O Cable only, then please provide the cable length.

5.1 Equipment Required

Special test equipment is not needed for trouble shooting and fault isolation. The required equipment is listed in Table 26, page 117. Any equipment satisfying the critical specification listed may be used.

Table 26: Required Test Equipment

Required Test Equipment	Critical Specification
DMM	Resolution: 3 ½ digit
	DC-Voltage Range: 200 mV, 2V, 20 V, 200V
	DC-Voltage Accuracy: ± 1%
	AC-Voltage Range: 200 V, 450 V
	AC-Voltage Accuracy: ± 2%
	Resistance Range: 200, 2 k, 20 k, 200 k, 20 MOhm
	Res.-Accuracy: ± 2% @ 200 Ohm to 200 kOhm
	Res.-Accuracy: ± 5% @ 20 Mohm
	Capacitance Range: 20 nF, 2 uF, 20 uF
	Capacitance Accuracy: ± 5%
Serial Data EIA Break-Out Box such as from International Data Sciences, Inc. 475 Jefferson Boulevard Warwick, RI 02886-1317 USA.	Model 60 or similar is recommended as it eases the troubleshooting of RS-232 communication problems significantly. Other manufacturers or models may be substituted.

NOTE. The EIA Break-out Panel is not necessary, but eases RS-232 communication problems troubleshooting significantly.

5.2 Basic Steps in Troubleshooting

The first step in troubleshooting is determining what type of failure is occurring. There are four types of failures:

- Communication failure
- Built-In test failure
- Beam failure
- Sensor failure

Communication failures can be the hardest problem to solve as the problem can be in any part of the system (i.e. the computer, WorkHorse, cable, or power). The symptoms include having the system not respond, or not responding in a recognizable manner (for example "garbled" text).

Built-In test failures will appear when the system diagnostics are run. Use *WinSC* or *BBTalk* to identify the failing test.

Beam failures can be identified when collecting data or during the user-interactive performance tests.

Sensor failures can also be identified when collecting data or during the user-interactive performance tests. The sensor may send incorrect data, or not be identified by the system.

5.3 Troubleshooting the WorkHorse

Although the WorkHorse is designed for maximum reliability, it is possible for a fault to occur. This section explains how to troubleshoot and fault isolate problems to the Least Replaceable Assembly level (see Table 25, page 116). Before troubleshooting, review the procedures, figures, and tables in this guide. Also, read the "System Overview," page 7 to understand how the WorkHorse processes data.

CAUTION. Under all circumstances, follow the safety rules listed in the "Troubleshooting Safety," page 118.

5.3.1 Troubleshooting Safety

Follow all safety rules while troubleshooting.

CAUTION. Servicing instructions are for use by service-trained personnel. To avoid dangerous electric shock, do not perform any service unless qualified to do so.

CAUTION. Complete the ground path. **The power cord and the outlet used must have functional grounds.** Before power is supplied to the WorkHorse, the protective earth terminal of the instrument must be connected to the protective conductor of the power cord. The power plug must only be inserted in a socket outlet provided with a protective earth contact. The protective action must not be negated by the use of an extension cord (power cable) without a protective conductor (grounding). Grounding one conductor of a two-conductor outlet is not sufficient protection.

CAUTION. Any interruption of the earthing (grounding) conductor, inside or outside the instrument, or disconnecting the protective earth terminal will cause a potential shock hazard that could result in personal injury.

CAUTION. Only fuses with the required rated current, voltage, and specified type must be used. Do not repair fuses or short circuit fuse-holders. To do so could cause a shock or fire hazard.

CAUTION. Do not install substitute parts or perform any unauthorized modifications to the instrument.

CAUTION. Measurements described in the manual are performed with power supplied to the instrument while protective covers are removed. Energy available at many points may, if contacted, result in personal injury.

CAUTION. Do not attempt to open or service the power supply.

CAUTION. Any maintenance and repair of the opened instrument under voltage should be avoided as much as possible, and when inevitable, should be carried out only by a skilled person who is aware of the hazard involved.

CAUTION. Capacitors inside the instrument may still be charged even if the instrument has been disconnected from its source of supply.

5.4 Troubleshooting a Communication Failure

WorkHorse ADCPs communicate by means of two serial communication channels. The user can choose between RS-232 and RS-422 classes of serial interfaces with a switch on the PIO board in the WorkHorse.

To successfully communicate, both the host computer and the WorkHorse must communicate using the same class of serial interface. Standard serial interfaces in IBM compatible computers are also RS-232.

NOTE. If you have just received your WorkHorse from RDI, the standard configuration is RS-232 for Rio Grande and Sentinels and RS-422 for Monitors and Mariners.

NOTE. If you are using a high baud rate and/or a long I/O cable (greater then 50 meters) connected to a Sentinel ADCP, RS-232 may not work. Switch to RS-422 and try to wakeup the WorkHorse again.

There are two types of communication failures; nothing happens at all when attempting to wake up the ADCP, or something happens, but not the correct wake up message is displayed.

Incorrect Wakeup Message

When you send a break and the data is garbled, you may have a baud rate or parity mismatch between the WorkHorse and the computer, or the WorkHorse may be set for RS-422 instead of RS-232. Check the RS-232/422 switch on the PIO card inside the WorkHorse. See "Incorrect Wakeup Messages," page 120 for symptoms of garbled wakeup messages.

NOTE. Most communication problems are associated with incorrect cabling (i.e. the serial cable is connected to the wrong port) or data protocols (i.e. the wrong baud rate is set between the WorkHorse and computer).

Nothing Happens

If you cannot talk to the WorkHorse (i.e., no wakeup message at all), you need to isolate the problem to a computer fault, power, cable failure, Deck Box (Mariner only), or a WorkHorse problem. Check the following items:

a. Connect the WorkHorse to a computer according to the appropriate ADCP User's Guide. Check that all cable connections are tight.

b. Is the Monitor/Sentinel WorkHorse AC power adapter working? Is the input voltage between 100 to 240 VAC? Is the output level 48 VDC?

c. If the Monitor/Sentinel WorkHorse is running from a battery, check that the battery voltage is above 30 Volts DC. WorkHorse ADCPs will work at 20 volts; however, both lithium and alkaline battery packs with voltages below 30 volts are at or near their end of life, and are approaching uselessness.

   For Rio Grande ADCPs, check that the battery voltage is above 10 Volts DC. Rio Grande ADCPs will work at 10 volts; however, batteries with voltages below 11 volts are at or near their end of life and are approaching uselessness.

d. Is the computer hooked up properly? Does it have power?

e. Make sure that your computer and the *BBTalk* or *WinSC* programs are set up to use the communication port the serial cable is connected to on the Deck Box (Mariner), or the communication port the I/O cable is connected to on the computer (Monitor and Sentinel).

NOTE. Use *WinSC's* Auto Detect feature to determine the communications setting (see the *WinSC* User's Guide for details on using *WinSC*).

5.4.1 Incorrect Wakeup Messages

The following conditions may indicate a communications mismatch or lost boot code.

- Sending a break causes "garbage" to appear on the screen. The "garbage" text may keep scrolling. This happens when the computer is using RS-232 and the ADCP is set for RS-422 or vice-versa. Check the RS-232/RS-422 switch on the PIO board (see "Communications Setting," page 62).
- Sending a break causes "garbage" to appear on the screen. You can hear the ADCP "beep" when the break is sent. The "garbage" text does not keep scrolling. Check that the ADCP and computer are both using the same baud rate. See the CB-command in the Command and Output Data Format guide.

- If the ADCP gives a steady "beep" when power is applied, the ">" prompt appears on the screen, and a "X" appears when additional breaks are sent, this may indicate that the boot code has been lost (see "ADCP Checks," page 123). This can happen if you abort while downloading new firmware. Try downloading the firmware again.

5.4.2 Check the Power

The following test can be done with a voltmeter to check the power.

Monitor/Mariner/Sentinel ADCPs

Check the power going into the ADCP by measuring the voltage on the end of the cable that connects to the WorkHorse at Pins 3 and 7 (GND) (see "Workhorse Cables," page 135). The voltage should be +48 VDC (using the standard AC adapter) or +48 VDC if you are using the Deck Box. If not, check the voltage at the other end of the cable, the AC adapter, and Deck Box (Mariner only).

Rio Grande ADCPs

Check the power going into the system by applying power to the I/O cable and measuring the voltage on Pins 4 and 8 (GND) (see "Workhorse Cables," page 135). The voltage should be 12 VDC. If not, check the voltage at the other end of the cable and the battery.

5.4.3 Check the I/O Cable

This test will check the communication between the computer and Monitor, Sentinel, or Rio Grande WorkHorse.

a. Disconnect both ends of the cable and measure the continuity using a DMM (see "Workhorse Cables," page 135 for the wiring diagram). Correct any problems found.

e. Reconnect the I/O cable to host computer.

a. Load *BBTalk* on your computer. Select the proper communications port (see the RDI Tools User's Guide for help on using *BBTalk*).

b. For RS-232 communications, short pins 1 and 2 together on the female 7-pin connector that was plugged into the WorkHorse (see "Workhorse Cables," page 135). If you are using RS-422, connect a jumper between pin 2 to pin 6 and another jumper between pins 1 to pin 5 of the underwater connector at the WorkHorse end of the cable.

c. Type any characters on the keyboard. The keys you type should be echoed on the screen. If you see characters, but not correctly (garbage), the cable may be too long for the baud rate. Try a lower baud rate. If this

works disconnect the jumper on pins 1 and 2 and then push any keys on the keyboard. You should NOT see anything you type.

d. If the keys are echoed correctly on the screen, the computer and the communication cable are good. Re-connect the I/O cable to the WorkHorse. The above loop-back test does not show if transmit and receive pairs are interchanged. Thus, it is important that you check the wiring diagrams provided in "Workhorse Cables," page 135.

NOTE. A loop-back test does not show if transmit and receive wires or pairs are interchanged, even though characters may be displayed correctly.

5.4.4 Check the Mariner Cables

This test will check the serial communication cable between the computer and Deck Box (Mariner only).

a. Disconnect both ends of the cable and measure the continuity using a DMM (see "Workhorse Cables," page 135 for the wiring diagram). Correct any problems found.

b. Reconnect the serial cable to host computer. Start the RD Instruments software utility program *BBTalk* on your computer. Make sure to select the proper communications port.

c. For testing a RS-232 cable, jumper pins 2 and 3 at the far end of the cable. To check a RS-422 cable, connect one jumper between pin 2 to 4, and one jumper between pins 7 to 8.

d. Type any characters on the keyboard. The keys you type should be echoed on the screen. If you see some characters, but not correctly, the cable may be too long for the baud rate. Try a lower baud rate. If this works disconnect the jumper and then push any keys on the keyboard. You should NOT see anything you type.

e. If you use cables that are **not** supplied by RD Instruments you must make sure that transmit and receive pairs are not interchanged. The above loop-back test does not show if transmit and receive pairs are interchanged. Thus, it is important that you check the wiring diagrams provided in "Workhorse Cables," page 135.

NOTE. A loop-back test does not show if transmit and receive wires or pairs are interchanged, even though characters may be displayed correctly.

f. If the keys are echoed correctly on the screen, the computer and the communication cable are most likely good. Re-connect the serial cable to the Deck Box. If the WorkHorse still does not wakeup, there could still be a problem with the Deck Box or ADCP.

5.4.5 ADCP Checks

Once you have eliminated possible problems with the power, I/O cable, communications settings, and the computer, that leaves the ADCP as the source of the problem. The following checks may help in some situations.

Cold Start the ADCP

a. Remove the housing to gain access to the PC boards.

b. Remove *all* power to the ADCP.

> **CAUTION.** Disconnect the power cables P1 and P2 on the PIO board to ensure that NO POWER is applied to the ADCP during the next step.

c. Short TP10 to TP11 on the PIO board for 10 seconds.

d. Remove the jumper.

e. Connect the computer and connect power to the ADCP. Send a break to the ADCP. This should start the ADCP in the "cold start" mode.

Fuse

Check the fuse on the PIO board is not blown (see "Fuse Replacement," page 60 for fuse replacement procedures).

> **CAUTION.** Only fuses with the required rated current, voltage, and specified type must be used. Do not repair fuses or short circuit fuse-holders. To do so could cause a shock or fire hazard.

Boot Code Error

If the ADCP gives a steady "beep" when power is applied, the ">" prompt appears on the screen, and a "X" appears when additional breaks are sent, this may indicate that the boot code has been lost. This can happen if you abort while downloading new firmware. Try downloading the firmware again.

5.4.1 Mariner Deck Box Checks

Once you have eliminated possible problems with the WorkHorse power, the serial data communication cable, and the host computer, that may leave the Deck Box as the source of the problem. Check the following conditions.

> **CAUTION.** The Deck Box contains Electro Static Sensitive Devices. You must take accepted ESD prevention measures **before** opening the Deck Box.

a. One of the interconnecting cables inside the Deck Box may not be fully seated. Turn off power. Remove the top cover of the Deck Box and check that all of the cables are properly seated.

b. Check the Deck Box fuses are not blown (see "Fuse Replacement," page 60 for fuse replacement procedures).

c. Verify that the **Power Status** LED indicator located at the front panel next to the circuit breaker switch is lit. Make sure power to the Deck Box is connected and that the circuit breaker is in the ON position.

d. Verify that if you send push the Reset button, the **Channel 1 In** LED on the front panel lights up temporarily. If it does, that means that the serial data receive channel seems to be functioning. If it does not light up then the receive channel is not functioning.

e. If the **Channel 1 In** LED indicator on the front panel does light up while pushing **Reset**, verify that the **Channel 1 Out** LED next to it responses by lighting up temporarily as well. If the **Channel 1 Out** LED does light up, but there is no Wake-Up message displayed on the computer screen, then this indicates there is still a problem with the serial data transmit path. A serial data Break-Out box between the Deck Box and the serial communications cable would be helpful for narrowing down the problem.

f. If the Break-Out box does not indicate any data transmission from the Deck Box to the computer but the **Channel 1 Out** LED front panel indicator does, the problem most likely is with the Deck Box. Switch power to the Deck Box off, and after a few seconds on again. Repeat the Deck Box Checks from the beginning. If the system does not respond normally, it may be malfunctioning and you should contact RD Instruments.

g. If the Break-Out box does indicate data transmission but there are no characters displayed on the computer screen, then the problem still lies with the communications cable or the computer.

5.5 Troubleshooting a Built-In Test Failure

The built-in diagnostic tests check the major ADCP modules and signal paths. The spare boards kit may be used to repair some failures. This kit includes:

- Spare Boards including PIO board, CPU board, and DSP board. These boards are held together with the standard M4 screw assembly and kept inside a protective anti-static bag.
- A disk containing your original beam cosine matrix table
- Tools for installation

NOTE. The Spare Boards kit is not included with the system. You can order the kit by contacting RD Instruments Customer Service department (see "Technical Support," page 134).

5.5.1 When to use the Spare Boards Kit

Use this Kit whenever you have any of the following problems:

- Cannot communicate to the WorkHorse and you have ensured that the serial port on the computer, WorkHorse Cable, Deck Box (Mariner only), and WorkHorse RS-232 to RS-422 converter (if applicable) are all working properly.
- Your WorkHorse fails any of the following PA tests at any time:

CPU Tests:
- RTC
- RAM
- ROM

DSP Tests:
- Timing RAM
- Demod RAM
- Demod REG
- FIFOs

System Tests:
- XILINK Interrupts
- Receive Loop Back Test

- Your WorkHorse fails any of the following PA tests provided the items indicated by {} have been checked:

Recorder Tests:
Any recorder tests fails {provided that the PCMCIA card(s) have been checked for proper installation, operation and they are DOS formatted; we STRONGLY recommend checking PCMCIA cards in a computer before replacing the boards}

System Tests:
Transmit {if the WorkHorse fails when it is in water and air bubbles have been rubbed from the faces}

Sensor Tests:
H/W Operation {if the WorkHorse fails when it is NOT sitting/resting on its side, or located near a large magnetic field like a motor in a boat}

The spare boards kit will not correct any of the following failures:

- A damaged beam or its urethane surface
- Damage to the transducer beam connections below the copper shield
- If it passes all PA tests and yet the data is all marked as bad
- Fails the following PA test:

System Tests:
Wide Bandwidth {bandwidth tests may fail due to external interference}

Narrow Bandwidth {bandwidth tests may fail due to external interference}

RSSI Filter

Transmit

Table 27: Pre-deployment Test (PA) Possible Cause of Failures

PA Test Name	Possible Cause of Failure
Pre-Deployment Tests CPU Tests: RTC RAM ROM	CPU board failed
Recorder Tests: PC Card #0 Card Detect Communication DOS Structure Sector Test (short) PC Card #1 Card Detect Communication DOS Structure Sector Test (short)	PC card not plugged in PC card failed DSP board failed
DSP Tests: Timing RAM Demod RAM Demod REG FIFOs	DSP board failed
System Tests: XILINX Interrupts	DSP or CPU board failed
Receive Loop-Back	DSP or CPU board failed
Wide Bandwidth	Not in water
Narrow Bandwidth	External interference
RSSI Filter	DSP or Receiver board failed
Transmit	Not in water or PIO board failed
Sensor Tests: H/W Operation	PIO board failed Receiver board failed Pressure sensor failed ADCP laying on its' side

5.5.2 Installation of the Spare Board Kit

This Kit has been setup so that you will replace all three of the Workhorse boards at once. This is done so that you do not have to risk damaging the individual boards while swapping in individual boards. The heading, pitch, and roll sensors have all been calibrated (the temperature sensor is an independent calibration and not changed by these new boards). Once you have replaced your original boards place them back in the Spare Board Kit box and contact RD Instruments Customer Service Department so that you can return them for repair.

CAUTION. Before handling either the Spare Board Kit or the original Board Set, always wear an earth-grounding static protection strap. The electronics in the Workhorse are very sensitive to static discharge. Static discharge can cause damage that will not be seen immediately and will result in early failure of electronic components.

We assume that a qualified technician or equivalent will perform all of the following work.

The Spare Boards Set will allow your system to perform to the same velocity specifications as your original set. There is, however, an offset error in the compass that can be as great as ±1.5 degrees. This error CANNOT be removed by doing the Field Calibration procedure (AF command) even though you MUST do this as part of the installation. The additional ±1.5 degrees can only be removed by RDI at the factory.

However, in most cases, the total compass error will still be within our original specification of ±5.0 degrees. The only way to be sure that you have smaller errors than this specification is to perform your own local compass verification and correct any errors you find during your post processing of the data.

5.5.3 Remove the Original Set of Boards

a. Remove the Transducer assembly from the pressure case. Use "WorkHorse Disassembly," page 45 for instructions.

b. With your earth-ground static protection strap on, use a 3mm Allen wrench, to remove the four bolts that secure the three original Workhorse boards to the Transducer assembly.

c. Note the orientation of the transmit cable connector as it is plugged into the PIO board and to the Receiver board (see Figure 46, page 128).

   This cable must be removed and it has a very tight fit. To remove this cable, lift straight up on the three boards and tilt slightly (no more than 2 cm) toward the cable. This should allow you enough slack to unplug the cable from the PIO board. If this is not possible you may unplug the

cable from the Receiver board. Be sure to note its orientation before unplugging.

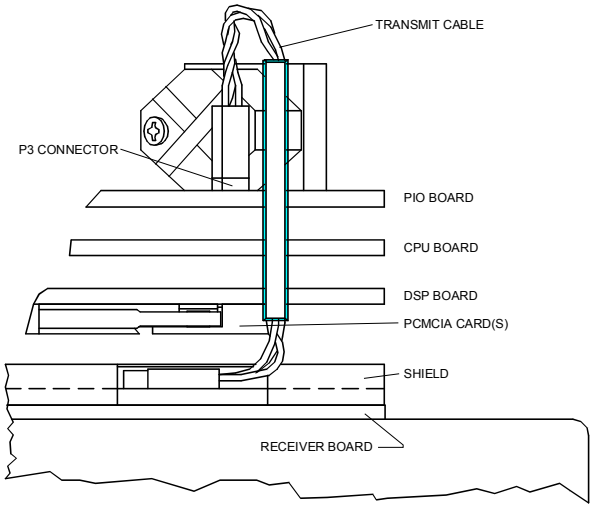

Figure 46. Transmit Cable

d. Once the transmit cable has been disconnected you may now remove the top three boards as a set by lifting the set straight up.

These top three boards are connected to each other via connectors and will remain as one piece (see Figure 47, page 129). The DSP board connects to the Receiver board through a 26-pin header. The 26-pin header is a series of male pins. The 26-pin header may or may not stay connected to the DSP board when you remove the top three boards. If you see that there are male pins sticking out of the DSP board when you finish removing the board set then the header has remained attached to the DSP board. If this happens remove it and place it into the Receiver board. To remove it, gently rock it back and forth while pulling it away from the DSP board. Once removed, align it with the connector on the Receiver board and press it into place.

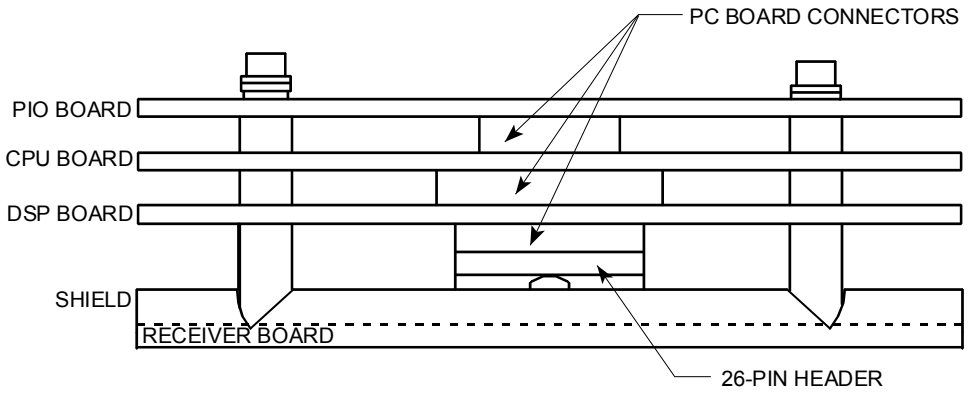

Figure 47. PC Board Connectors

e. Remove all PCMCIA card(s) from the original set of boards. These PCMCIA cards will be used again once you install your Spare Boards Set. The Spare Board set does NOT contain a PCMCIA card(s). The PCMCIA card(s) are located on the bottom of the DSP board. To remove the PCMCIA card(s) press the button(s) on the side of the PCMCIA card slot. As you press this button the PCMCIA card will slide out. You will have to pull the card(s) out the rest of the way once the button is depressed all the way in.

f. Set the original board set to the side for now.

5.5.4 Installing the Spare Board Kit

a. With your earth-ground static protection strap on, remove the Spare Board Kit from the anti-static bag.

b. Using a 3 mm Allen wrench and a 7mm wrench remove the nuts from the bolts that secure the Spare Boards together. You will be using these bolts to secure the spare set in your system. DO NOT change the position of any of the bolts. The bolt containing the felt washers and ground jumper must remain in the same position (see Figure 48, page 130).

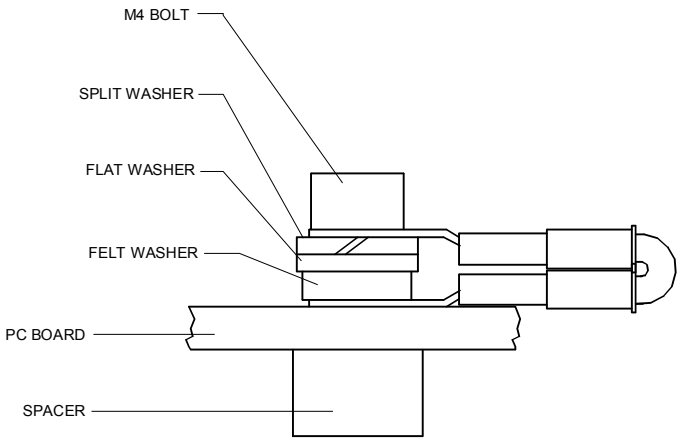

Figure 48. Ground Jumper

c. Place the nuts (just removed) on the four bolts of your original set of boards and place them into the anti-static bag. You will use the new set of bolts included in the Spare Board kit to secure them to the Transducer assembly.

d. Install all PCMCIA cards removed in "Remove the Original Set of Boards," page 127 step e into the PCMCIA card slots. The PCMCIA card is keyed and will only connect when it has been aligned correctly and slid all the way in. The PCMCIA card is installed with the label side pointing away from the DSP board.

e. Connect the Spare Board set to the Receiver board. Align the Spare Board set to the 26-pin header connected to the Receiver board. As you connect the Spare Board set, connect the transmit cable you removed in "Remove the Original Set of Boards," page 127 step c. Be sure to connect the cable in the same orientation as was installed on the original board set.

   To test that the transmit cable is connected properly, start *BBTalk* and run the PT4 test. The test failure example shown below is what you would see for a missing or improperly attached transmit cable.

```
[BREAK Wakeup A]
WorkHorse Broadband ADCP Version 16.21
RD Instruments (c) 1996-2002
All Rights Reserved.
>pt4

IXMT    =      0.0 Amps rms  [Data= 0h]
VXMT    =     19.3 Volts rms [Data=4ch]
   Z    =    999.9 Ohms
Transmit Test Results = $C0 ... FAIL
>
```

f. Insert the four new bolts and tighten to 4 Newton-pounds.

g. Install the Transducer into the Pressure Case. See "Workhorse Reassembly," page 46 for instructions.

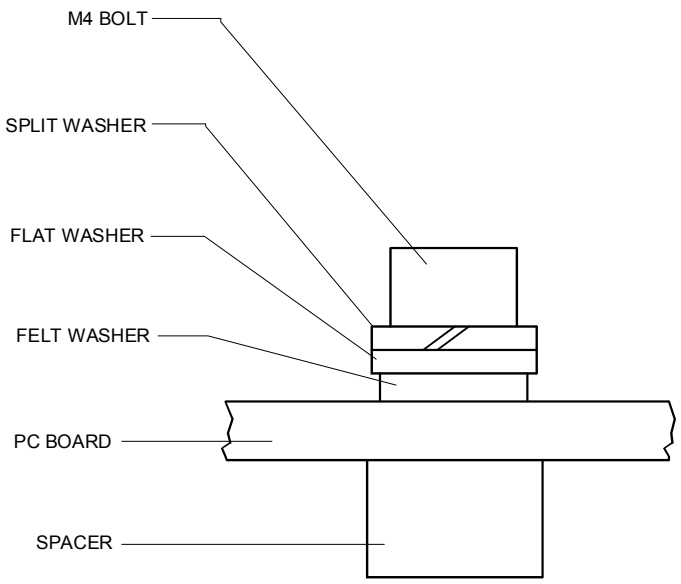

Figure 49. Mounting Hardware

5.5.5 Installing the Beam Cosine Matrix

The beam cosine matrix table corrects small transducer beam misalignment angles that occur during manufacturing.

a. Connect your Workhorse ADCP as you would normally and apply power.

b. Start *BBTalk* and confirm that the Workhorse ADCP is communicating normally and which communication port you are using (COM 1 or COM 2).

c. Place the Beam Cosine Matrix Disk into your computer's disk drive.

d. If your ADCP is connected to COM 1, press **<F2>** and run the script file *xxxx_1.scr* (where xxxx is your system serial number).

   If your ADCP is connected to COM 2, press **<F2>** and run the script file *xxxx_2.scr* (where xxxx is your system serial number).

   Your Beam Cosine Matrix table will automatically be updated in your ADCP and a file called SPRBD.LOG will be created. You can view the contents of this file to confirm that the data entered during the &V portion matches the contents in the PS3 results under the label Q14.

5.5.6 Testing the System

a. Install the Transducer in the Pressure Case.

b. Connect the cable and power as you normally do and test as ADCP as shown in "Testing the WorkHorse," page 96. All PA tests should pass when run in water and the PC tests should pass out of water.

c. ***Perform a field calibration of your compass*****.** Use "Compass Calibration," page 56 for instructions on running the AF command. Remember that there will be up to 1.5 degrees of offset error in the compass measurement. This error is not removed by the field calibration.

You have completed the WorkHorse Spare Board Installation. The original boards can be returned to RDI for repair. Please contact the RD Instruments Customer Service Department for return shipping instructions and repair costs at:

- EMAIL: rdifs@rdinstruments.com
- PHONE: 858-693-1178
- FAX: 858-578-4016

5.6 Troubleshooting a Beam Failure

If the beam continuity test fails, a bad DSP board, Receiver board, PIO board, or a bad beam may cause the failure. If replacing the DSP and PIO board (included with the spare boards kit) does not fix the problem, the ADCP must be returned to RDI for repair.

```
>PC1

BEAM CONTINUITY TEST

When prompted to do so, vigorously rub the selected
beam's face.

If a beam does not PASS the test, send any character to
the ADCP to automatically select the next beam.

Collecting Statistical Data...
  41  46  45  43  41  46  45  43  41  46  45  42  41  46  44  42

Rub Beam 1 = PASS |   NOTE - Possible cause of failure
Rub Beam 2 = PASS |          DSP Board
Rub Beam 3 = PASS |          Receiver Board
Rub Beam 4 = PASS |          PIO Board
>                 |          Beam
```

5.7 Troubleshooting a Sensor Failure

If the PA test fails the sensor test, run PC2 to isolate the problem. The ambient temperature sensor is mounted on the receiver board. This sensor is imbedded in the transducer head, and is used for water temperature reading. The attitude temperature sensor is located on the PIO board under the compass. The ADCP will use the attitude temperature if the ambient temperature sensor fails.

If one of the temperature sensors fails, the PC2 test will show both sensors at the same value.

```
>PC2
Press any key to quit sensor display ...

Heading   Pitch    Roll   Up/Down    Attitude Temp   Ambient Temp   Pressure
301.01°  -7.42°  -0.73°     Up          24.35°C         22.97°C         0.0 kPa
300.87°  -7.60°  -0.95°     Up          24.36°C         22.97°C         0.0 kPa
300.95°  -7.60°  -0.99°     Up          24.37°C         22.97°C         0.0 kPa
300.71°  -7.61°  -0.96°     Up          24.37°C         22.98°C         0.0 kPa
300.69°  -7.61°  -0.96°     Up          24.35°C         22.98°C         0.0 kPa
300.76°  -7.60°  -0.98°     Up          24.38°C         22.97°C         0.0 kPa
>
```

NOTE. If the temperature sensor is bad, the data can still be collected with no effects to accuracy or quality. Contact RDI about scheduling a repair of the temperature sensor at your convenience.

NOTE. For external sensor verification, see “Dock Side Tests,” page 102.

5.7.1 Fault Log

To determine why a sensor failed, view the fault log. To view the fault log, start *BBTalk*. Press the **End** key to wakeup the ADCP. Type the following commands: **CR1**, **FC**, **PA**, **FD**. The fault log will be displayed by the FD-command.

```
[BREAK Wakeup A]

WorkHorse Broadband ADCP Version x.xx
RD Instruments (c) 1996-1997
All rights reserved.
>CR1
>FC
>PA
|          (PA test results (not shown))
|
>FD
Total Unique Faults   =     2
Overflow Count        =     0
Time of first fault:   97/11/05,11:01:57.70
Time of last fault:    97/11/05,11:01:57.70

Fault Log:
Entry #  0 Code=0a08h  Count=    1  Delta=    0 Time=97/11/05,11:01:57.70
 Parameter = 00000000h
  Tilt axis X over range.
```

```
Entry #  1 Code=0a16h  Count=    1  Delta=    0 Time=97/11/05,11:01:57.70
 Parameter = 00000000h
  Tilt Y axis ADC under range.
End of fault log.
```

5.8 Technical Support

If you have technical problems with your instrument, contact our field service group in any of the following ways:

RD Instruments

9855 Businesspark Ave.

San Diego, California 92131

(858) 693-1178

FAX (858) 695-1459

rdifs@rdinstruments.com

RD Instruments Europe

5 Avenue Hector Pintus

06610 La Gaude, France

+33(0) 492-110-930

+33(0) 492-110-931

rdifs@rdieurope.com

Web: http://www.rdinstruments.com

If your instrument works and you have questions involving a specific application, you may call either the field service group (above) or our sales/marketing staff.

NOTE. When the RDI-US and RDI-Europe offices are closed, customers may now call +1 858-578-0781 to have their after-hours emergencies resolved.

5.9 Workhorse Cables

This section has information on Workhorse cabling. Special user-requests may cause changes to the basic wiring system and may not be shown here. We provide these drawings only as a guide in troubleshooting the ADCP. If you feel there is a conflict, contact RDI for specific information about your system. The following figures show various Workhorse cable locations, connectors, and pin-outs.

NOTE. Where shown, the color code is for reference only; your cable may be different.

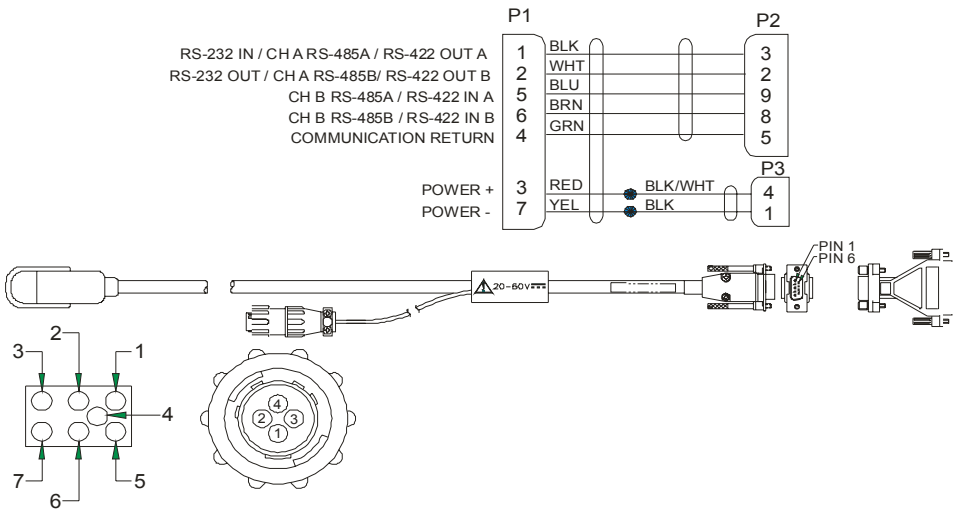

Figure 50. Monitor and Sentinel I/O Cable Wiring

NOTE. Where shown, IN refers to signals going into the ADCP and OUT refers to signals coming out of the ADCP.

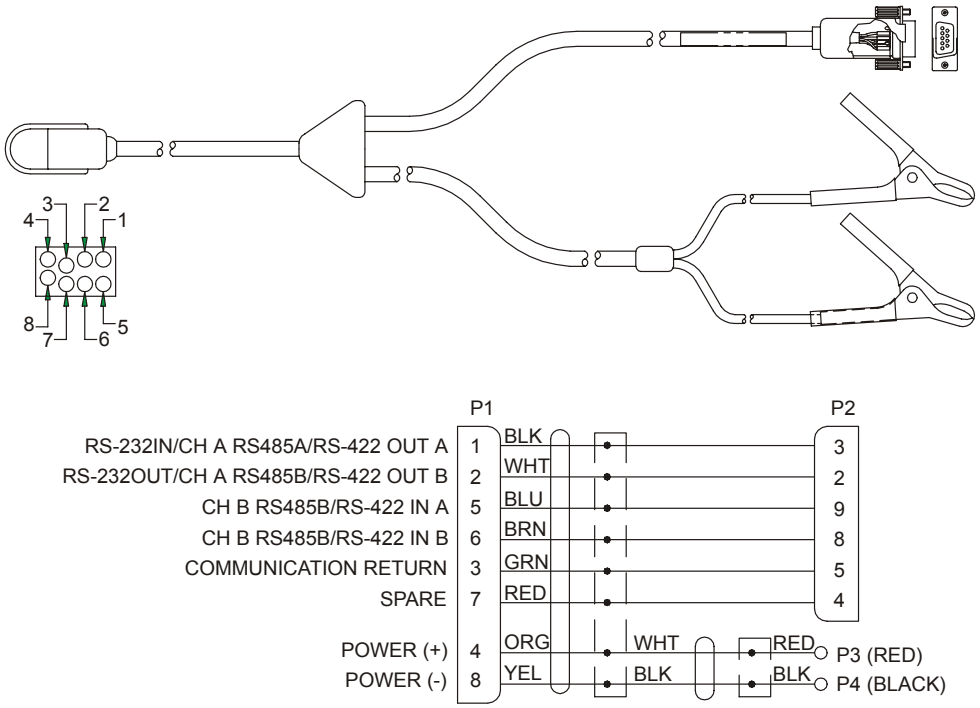

Figure 51. Rio Grande I/O Cable Wiring

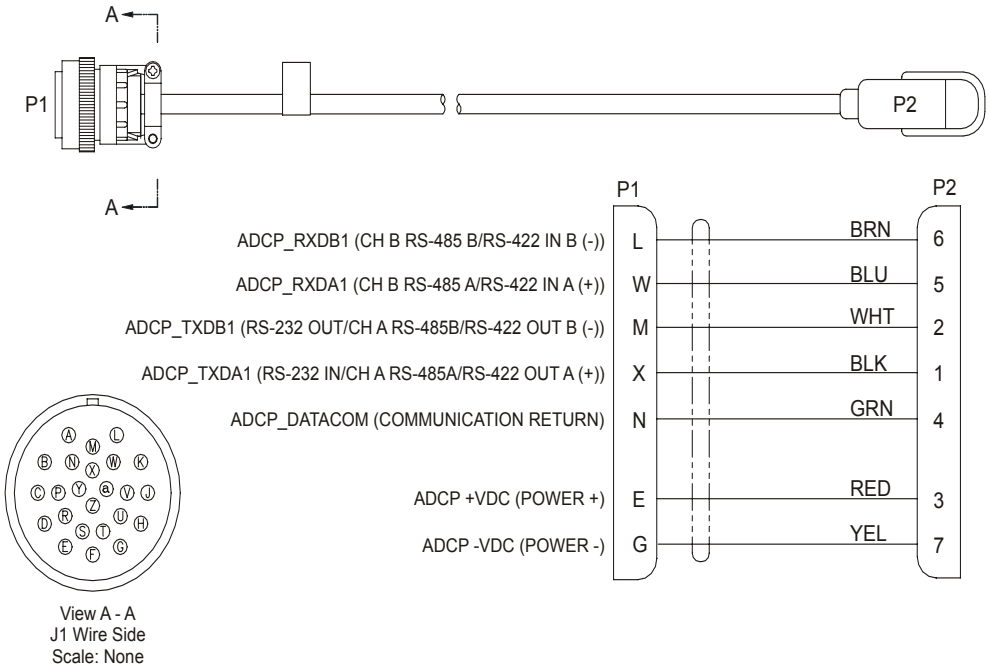

Figure 52. Mariner I/O Cable Wiring

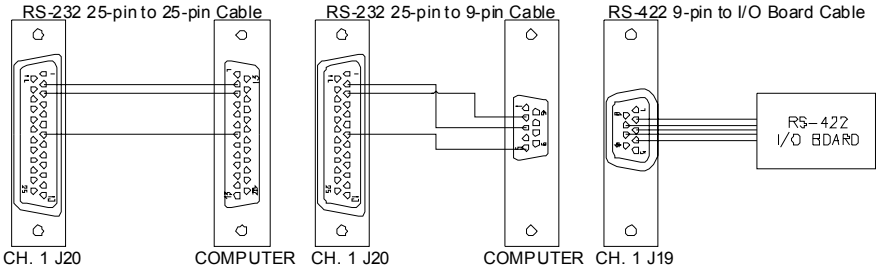

Cable Type	ADCP Signal	Deck Box	Computer	Computer Signal
RS-232	DATA IN	2	2	DATA OUT
25-pin to	DATA OUT	3	3	DATA IN
25-pin	GND	7	7	GND
RS-232	DATA IN	2	3	DATA OUT
25-pin to	DATA OUT	3	2	DATA IN
9-pin	GND	7	5	GND
RS-422	DATA IN A	2	-	DATA OUT A (+)
9-pin to	DATA OUT A	4	-	DATA IN A (+)
I/O board	COMMON	3	-	COMMON
	DATA IN B	7	-	DATA OUT B (-)
	DATA OUT B	8	-	DATA IN B (-)

NOTE: These cables provides RS-232 or RS-422 communications. Two cables are provided with the instrument: (1) 25-pin to 25-pin RS-232 cable, and (1) 25-pin to 9-pin RS-232 cable. Each cable is about 2-meters long and has a diameter of 8 mm (0.31 in.). For cable lengths longer than 25 meters, we recommend you use RS-422 communications. The cable for RS-422 communication is not provided with the equipment.

Figure 53. Mariner Deck Box to Computer Serial Cable

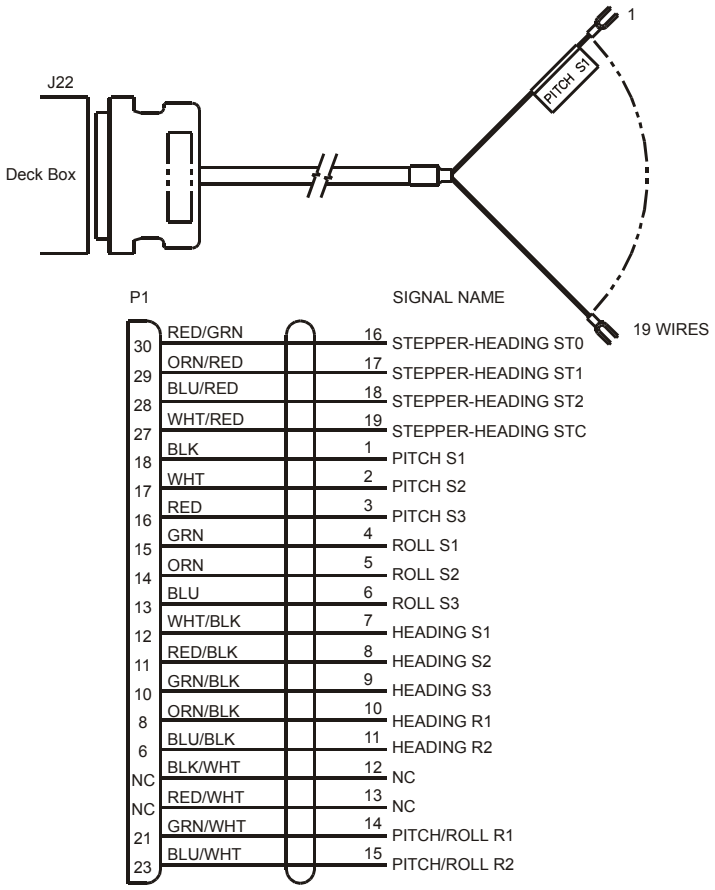

NOTE: This cable provides synchro/stepped heading signals and/or synchro tilt from an external gyrocompass to the deck box. This cable is provided with the instrument (length specified by user). Cable specifications: 26 conductors, cable OD = 8 mm (0.31 in.), terminated at one end with a 37-pin connector (deck box side), terminated at the other end (gyro side) with 19 spade (or forked) lugs for connecting to the gyro's terminal strip.

Figure 54. Mariner Gyro Cable

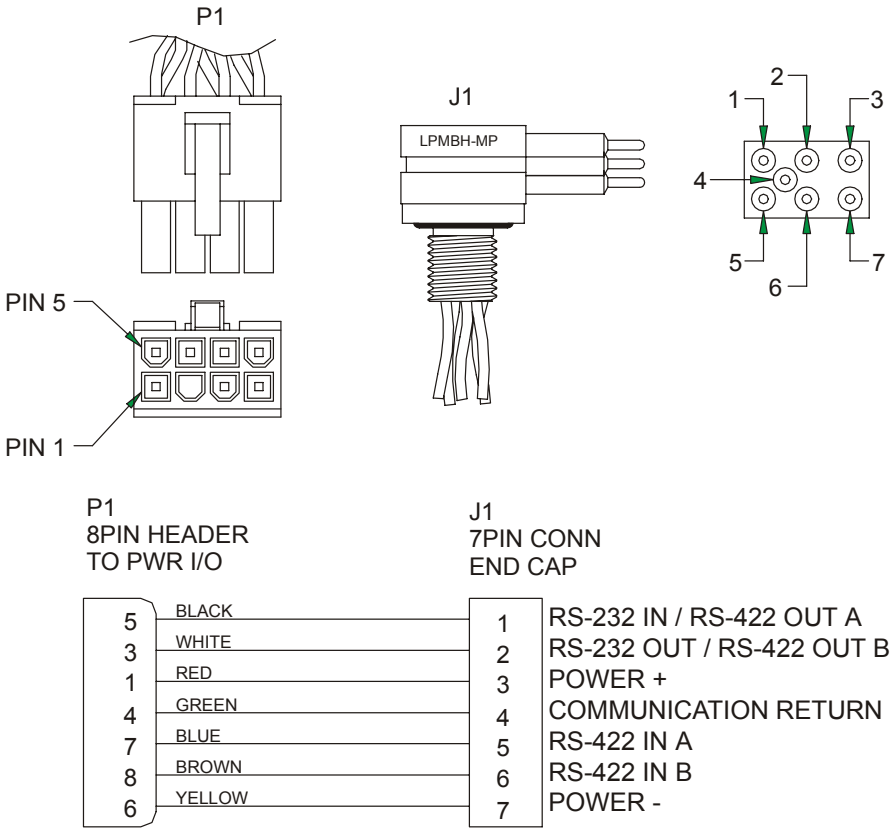

Figure 55. Mariner/Monitor/Sentinel Internal I/O Cable (End-Cap to PIO Board) Wiring

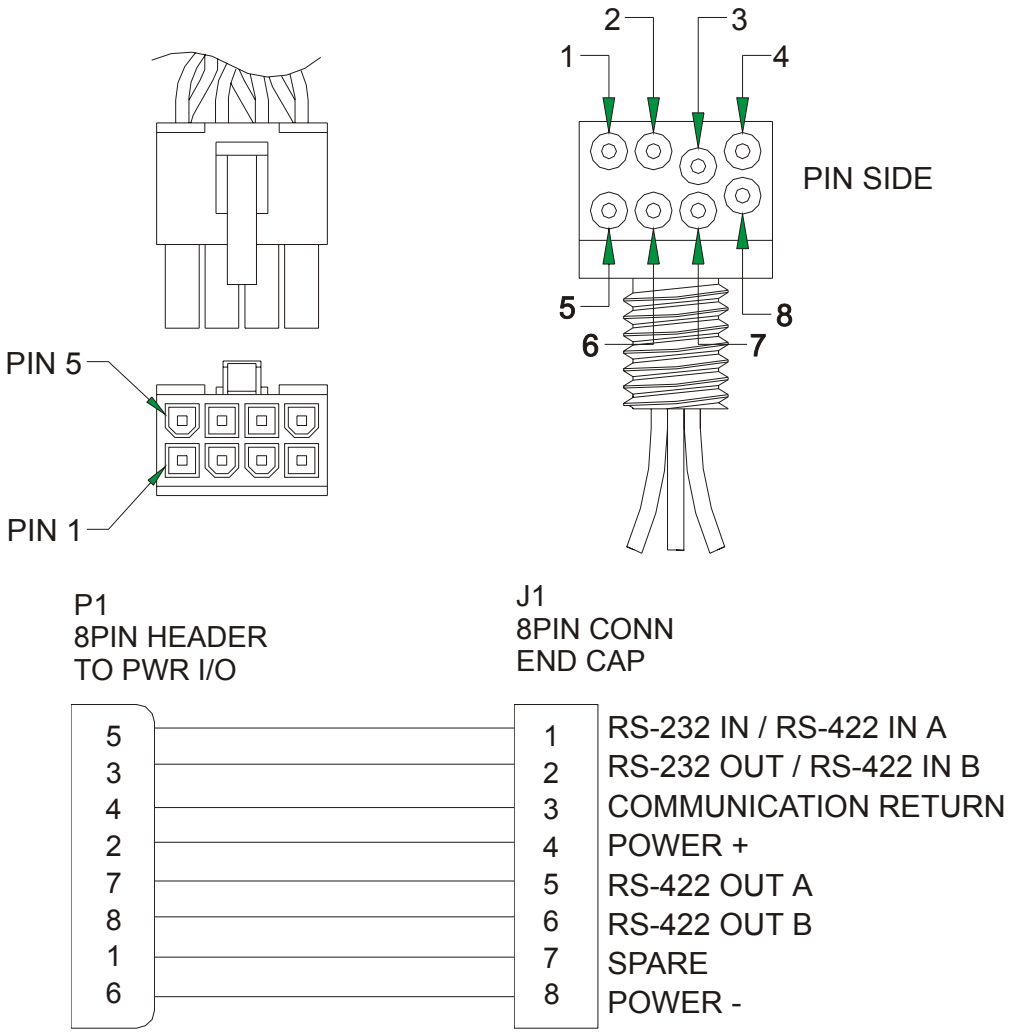

Figure 56. Rio Grande Internal I/O Cable (End-Cap to PIO Board) Wiring

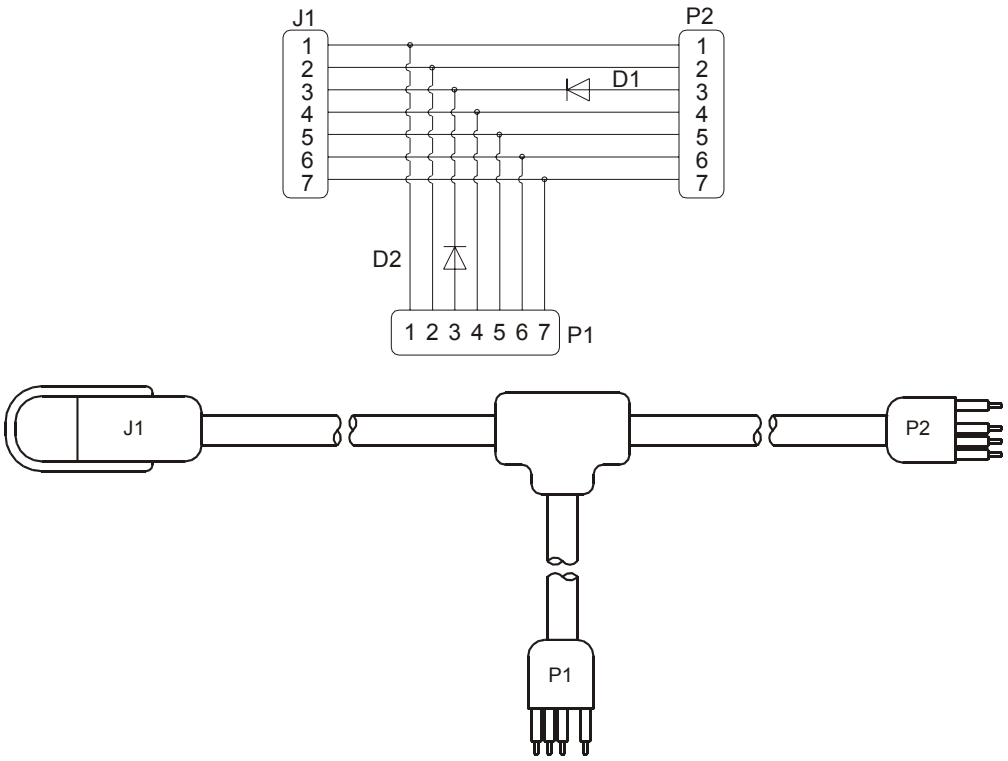

Figure 57. External Battery Pack “Y” Cable

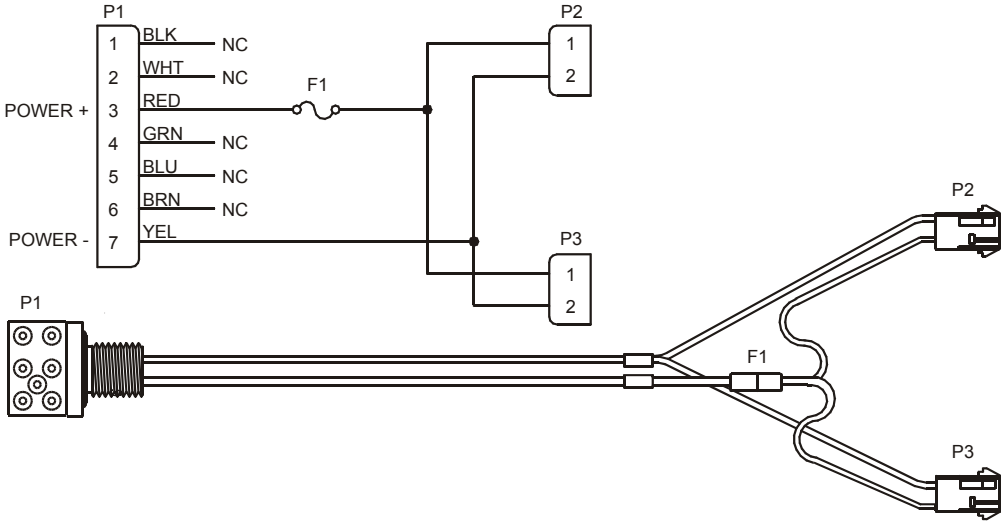

Figure 58. External Battery Case Internal Wiring

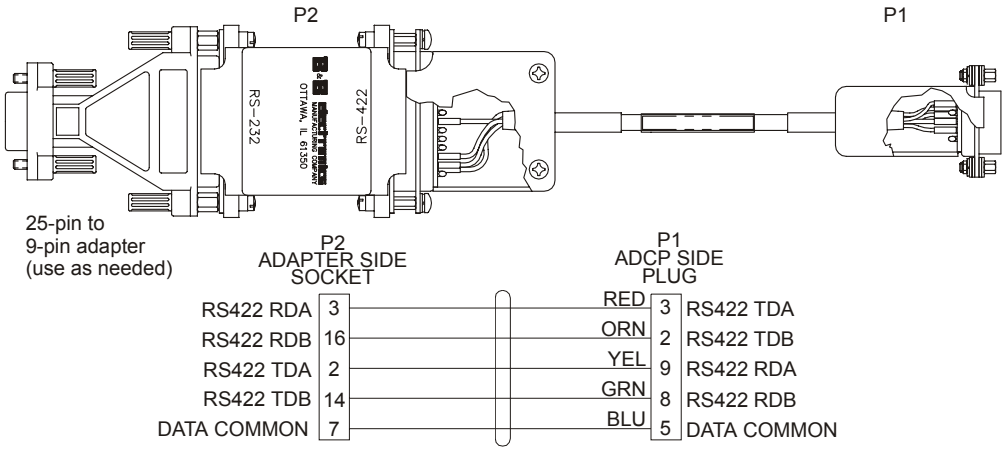

Figure 59. RS232-to-RS422 Converter Wiring (25-Pin to 9-Pin)

5.10 System Overview

This section presents a functional description of WorkHorse operation using block diagrams.

5.10.1 Operating Modes

The WorkHorse has two modes of operation: *command mode*, and *ping mode* (also referred to as "Deployment Saver" Mode). Depending on what mode the ADCP is in; it will go either to sleep, or to resume pinging.

Command Mode

Whenever you wake up your WorkHorse, power dissipation increases from less than 1 mW to around 2.2 W. If you leave the WorkHorse in command mode without sending a command for more than 5 minutes, the WorkHorse automatically goes to sleep. This protects you from inadvertently depleting batteries.

- If the ADCP receives a BREAK, it will go to the command prompt and wait for a command. The ADCP will wait at the command prompt for five minutes. If no commands have been sent, it will go to sleep (also called "Battery Saver" mode).
- If you press the reset switch (located on the CPU board), the ADCP will go to sleep.
- If the ADCP receives a CS-command, it will go into the ping mode and begin pinging. If a TF-command (Time of First Ping) was sent prior to the CS-command, then the ADCP will go to sleep until the TF time occurs.

- If the ADCP does a COLD wakeup (i.e. an unknown state), it will go to the command prompt.
- If the ADCP is asleep for approximately nine hours, it wakes up to charge the capacitor used to maintain RAM. Once the capacitor is charged (this only takes a few seconds), the ADCP goes back to sleep.

Ping Mode

After you send commands to the WorkHorse that tells it to start collecting data, the WorkHorse goes into deployment saver mode. If power is somehow removed and later restored, the WorkHorse simply picks up where it left off and continues to collect data using the same setup.

- If the ADCP receives a BREAK, it will go to the command prompt, but stays in the ping mode. If a valid command is received, the ADCP will switch to the command mode. If no valid command is received, a warning will be displayed after four minutes, indicating that the system will self-deploy. After a total of five minutes with no input, the ADCP will resume pinging.
- If you press the reset switch, and an alarm is currently set for the next ping, the ADCP will go to sleep. If no alarm is set, the system will start a new deployment and starts pinging immediately unless a TF-command had been set after the last BREAK. In this case, the ADCP will go to sleep until the TF time occurs.
- If the ADCP does a COLD wakeup, the system will start a new deployment and starts pinging immediately unless a TF-command had been set after the last BREAK. In this case, the ADCP will go to sleep until the TF time occurs if the TF time is valid (i.e., not in the past).
- If the ADCP is asleep for approximately nine hours, it wakes up to charge the capacitor used to maintain RAM. Once the capacitor is charged, if a valid alarm is set for the next ping time, the ADCP goes back to sleep and waits for the alarm. If no alarm is set, the ADCP will resume pinging immediately, or wait for the TF time (if valid), and then start pinging.

5.10.2 Overview of Normal WorkHorse Operation

Refer to Figure 60, page 148 through Figure 64, page 152. The following events occur during a typical data collection cycle.

a. The user or a controlling software program sends data collection parameters to the WorkHorse. The user/program then sends a CS-command to start the data collection cycle. The firmware program stored in the CPU microprocessor takes control of WorkHorse operation based on the commands received through the serial I/O cable.

   Figure 60, page 148 shows a flow chart of the wake-up logic used by the WorkHorse. The WorkHorse determines what to do based on where the wake-up came from (a Break, CS-command, battery saver timer, or watchdog timer was detected).

b. On the PIO Board, the POWER REGULATOR circuit sends a transmit command to the POWER AMPLIFIER circuit. This tells the WorkHorse to start acoustic transmissions (pinging) on all TRANSDUCERS.

c. The TRANSDUCERS receive echoes from the backscatter. The RECEIVER board amplifies and translates the echoes into a base-band frequency.

d. The CPU board processes the received echoes.

e. After echo reception, the WorkHorse injects a self-test signal into the RECEIVER board and processes the signal as normal data for test purposes.

f. The THERMISTOR measures water temperature at the transducer head and sends it to the CPU via the DSP Board.

g. The PIO Board sends pitch and roll from the TILT SENSOR and WorkHorse heading from the COMPASS to the DSP Board. The DSP Board digitizes this information and sends it to the CPU for processing.

h. The CPU repeats steps “b” through “g” for a user-defined number of pings. The CPU averages the data from each ping to produce an ensemble data set.

i. At the end of the ensemble (sampling) interval, the CPU sends the collected data to the serial I/O connector or PCMCIA recorder.

5.10.3 Functional Description of Operation

The following paragraphs describe how the WorkHorse operates and interacts with its modules. Refer to Figure 60, page 148 through Figure 64, page 152 throughout this description.

Input Power

The Workhorse Monitor/Sentinel requires a DC supply between 20 volts and 50 volts. The WorkHorse Rio Grande requires a DC supply between 10.5 volts and 18 volts. Either an external DC power supply or internal battery packs can provide this power. Figure 61, page 149 and Figure 62, page 150 shows the DC voltage power distribution path.

Monitor External DC Power Supply – With an external supply, power is applied to pins 3 (positive) and 7 (negative) on the external connector (see Figure 63, page 151). The power then goes through an electromagnetic interference (EMI) filter on the PIO Board. This filter reduces the chance that external noise sources associated with the external power source can disrupt Workhorse operation.

Sentinel Internal Battery Packs – Each internal battery pack uses 28 alkaline "D" cells. Each pack supplies a nominal output voltage of 42 volts open circuit when fresh. The diode-isolated battery packs can only power the Workhorse; they cannot "charge" each other.

Rio Grande External DC Power Supply – The Rio Grande requires a DC supply between 10.5 volts and 18 volts. Either an external DC power supply or battery can provide this power. If you are using a battery, use the largest rated amp-hour battery as possible. A car battery should last one to two days powering a 600-kHz ADCP. Figure 62, page 150 shows the DC voltage power distribution path.

Power is applied to pins 4 (positive) and 8 (negative) on the external connector. The power then goes through an electromagnetic interference (EMI) filter on the PIO Board. This filter reduces the chance that external noise sources associated with the external power source can disrupt Rio Grande operation.

Mariner Deck Box – The deck box automatically scales the input voltage to the proper level. No special jumpers or switch settings are required to select the input voltage. If more than one power source is connected to the deck box, the highest voltage source will be used. Although this is not recommended, it will not damage the deck box.

AC Power. The deck box accepts input voltages of 98 to 264 VAC, 50 to 60Hz (J27). This input voltage will be converted to 48 VDC. This is the voltage supplied to the ADCP.

12 VDC Car Battery. Use a 12 VDC car battery (J26) when AC power is not available. The deck box converts the voltage to 48 VDC. This is the voltage supplied to the ADCP. Use the largest rated amp-hour battery as possible. A car battery should last one to two days powering a 1200-kHz River ADCP.

DC Power Supply. If you are using an external DC power supply connected to the deck box on J25 (20 to 50 VDC, 3.0 A), the voltage from the external power supply is sent *directly* to the ADCP. This is useful if you want to increase (higher voltage level) or decrease (lower voltage level) the range of the ADCP. The current requirement for the power supply is listed as a reference. Using a lesser-rated power supply can cause the voltage level to drop. The ADCP will draw only the current it needs.

Board Descriptions

PIO Board.

- Receives the filtered/internal power.
- Uses a diode "OR" gate to determine which power source to use (external or internal). With both sources connected, the OR gate selects the "higher" voltage for Workhorse use.
- Limits the in-rush of current to the WorkHorse and provides over- and negative-voltage protection. Either condition will blow a protective fuse. However, damage could occur to other circuits before the fuse blows. Please ensure you apply only voltages within the specified range (+20 to +50 VDC for Mariner/Monitor/Sentinel and +10.5 to 18 VDC for Rio Grande).
- Converts the operating power supply (filtered/isolated 20 to 50 VDC or 5 to 18 VDC) in a DC-to-DC converter to the +5 VDC (Vcc) used to power all other WorkHorse circuits.
- Uses the Power Amplifier circuit on the PIO board to generate the high-amplitude pulse AC signal that drives the sonar transducers. The Power Amplifier sends the drive signal to the Receiver Board.
- RS-232/RS-422 switch.

CAUTION. Do not swap the PIO board between a Rio Grande and a Mariner/Monitor/Sentinel ADCP. The power requirements are different.

CPU Board.

- Real time clock.
- Generates most of the timing and logic signals used by the WorkHorse.

DSP Board.

- Contains the PCMCIA recorder slots.
- Analog to Digital converter.
- Digitizes information from sensors and sends sensor information to the CPU.

Receiver Board.

- Tuning functions
- Receiver functions
- Temperature sensor
- Interface for pressure sensor

Sensors

This section describes the standard WorkHorse sensors. The PIO and DSP boards control the environmental sensors and contain unit-specific data. Sensors include:

Temperature Sensor (Thermistor) - Used to measure the water temperature. The system uses this data to calculate the speed of sound. This sensor is embedded in the transducer head and is not field replaceable.

Up/Down Sensor - Determines whether the transducer head is facing up or down. This sensor is located on the PIO board.

Compass - Determines the Beam 3 heading angle of the WorkHorse using a flux-gate compass. This sensor is located on the PIO board. The flux-gate measured earth magnetic field vector together with the tilt sensor pitch and roll information is used to determine the heading. Since the tilt sensor data is only valid when the ADCP is ±20° from vertical, the heading information is also limited to this range.

Attitude Sensor - Determines the tilt angles of the WorkHorse. This sensor is located on the PIO board. The attitude sensor uses a pitch and roll liquid-filled sensor. This sensor is functional to an angle of ±20° from vertical.

Pressure Sensor (optional) - Measures pressure at the WorkHorse transducer. This sensor is embedded in the transducer head and is not field replaceable.

The CPU microprocessor controls a multiplexed analog-to-digital converter to accept analog data from the sensors. Digital data are taken in directly. The pressure sensor incorporates a Wheatstone Bridge strain gage to measure the water pressure at the transducer faces. Depth is calculated from pressure, with water density adjusted by the salinity (ES) setting.

Calibration data for the sensors, a beam-angle correction matrix, and unit identification parameters (frequency, serial number, firmware version, etc.) are stored in ROM.

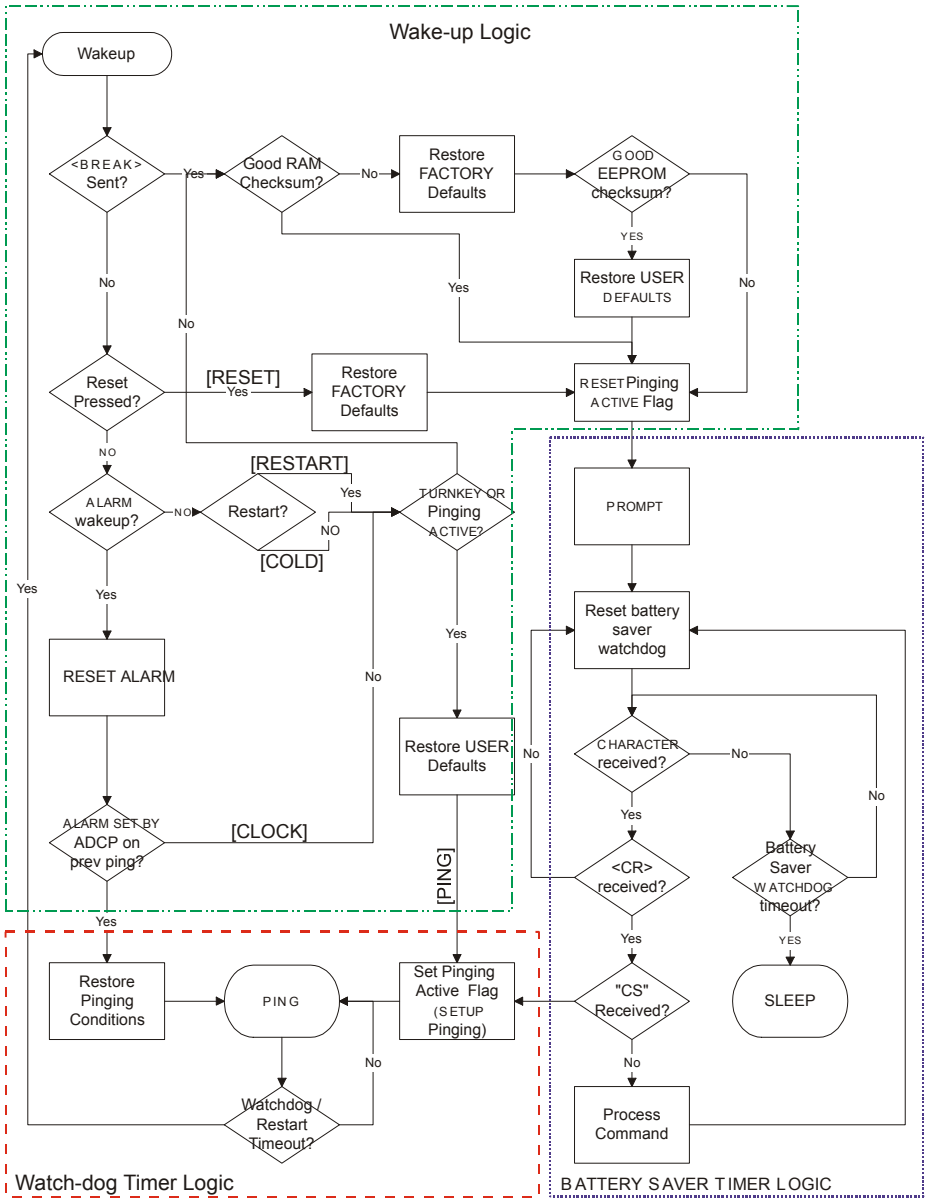

Figure 60. WorkHorse Wake-up and Timer Logic

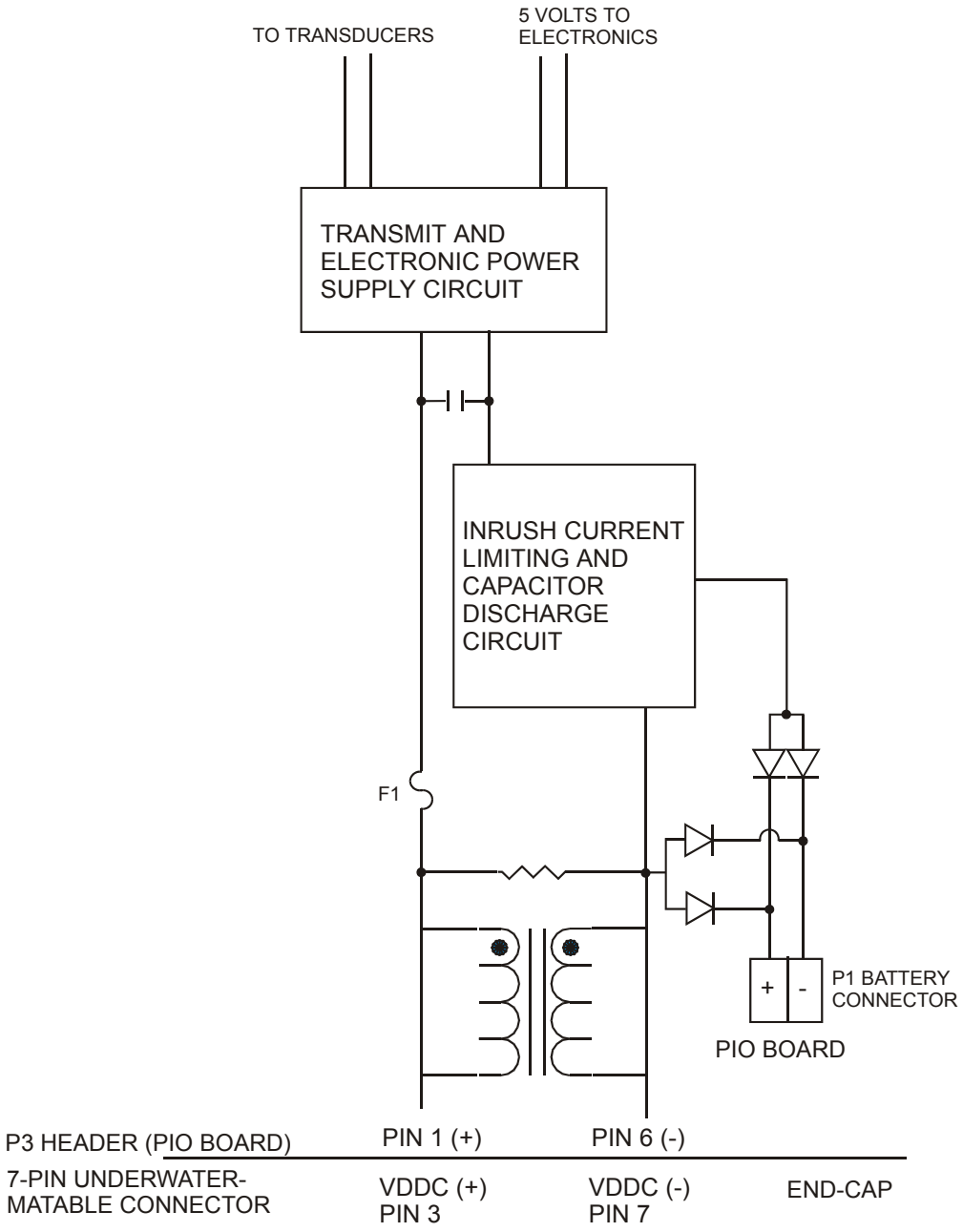

Figure 61. Mariner/Monitor/Sentinel DC Power Path

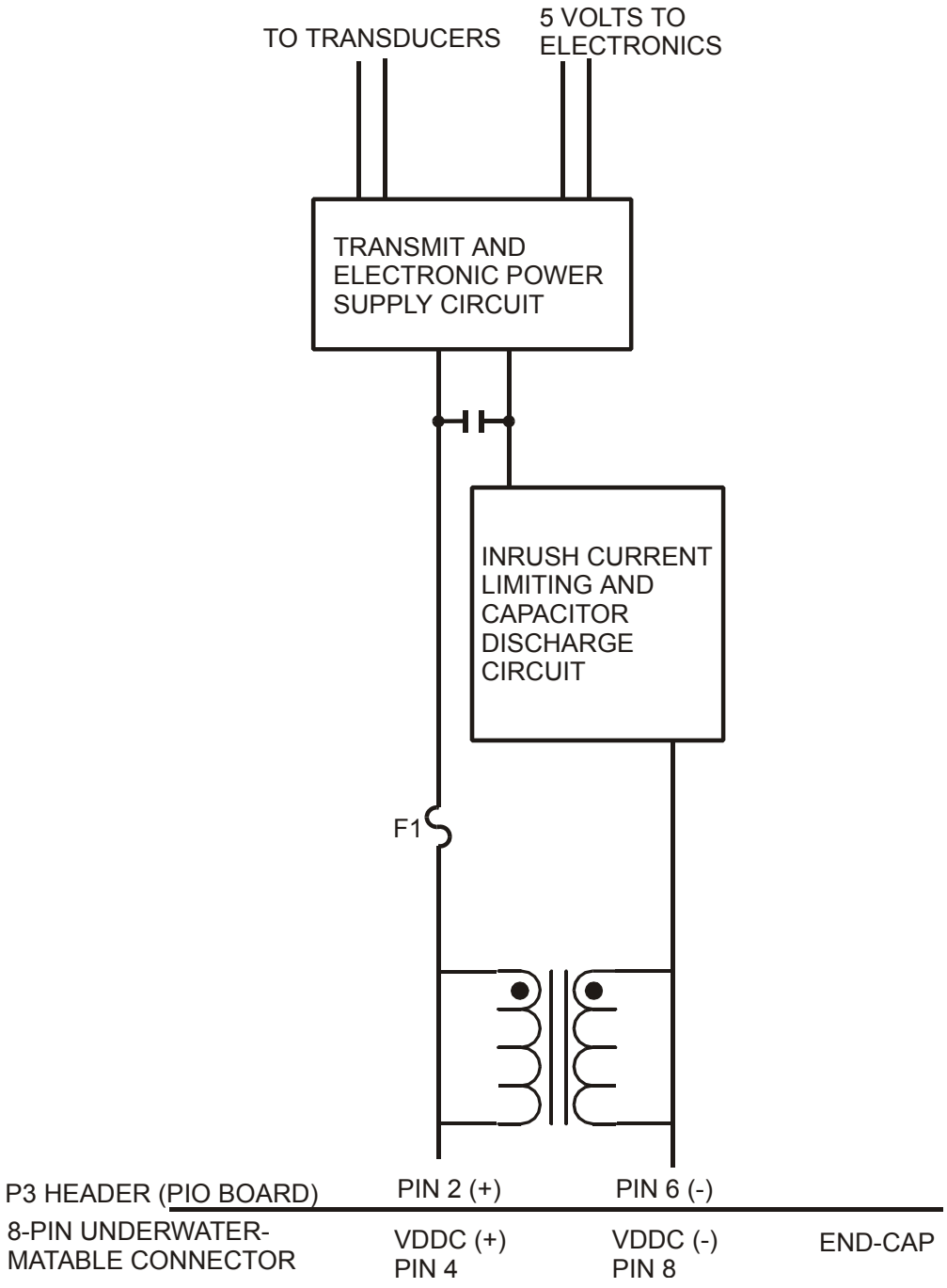

Figure 62. Rio Grande DC Power Path

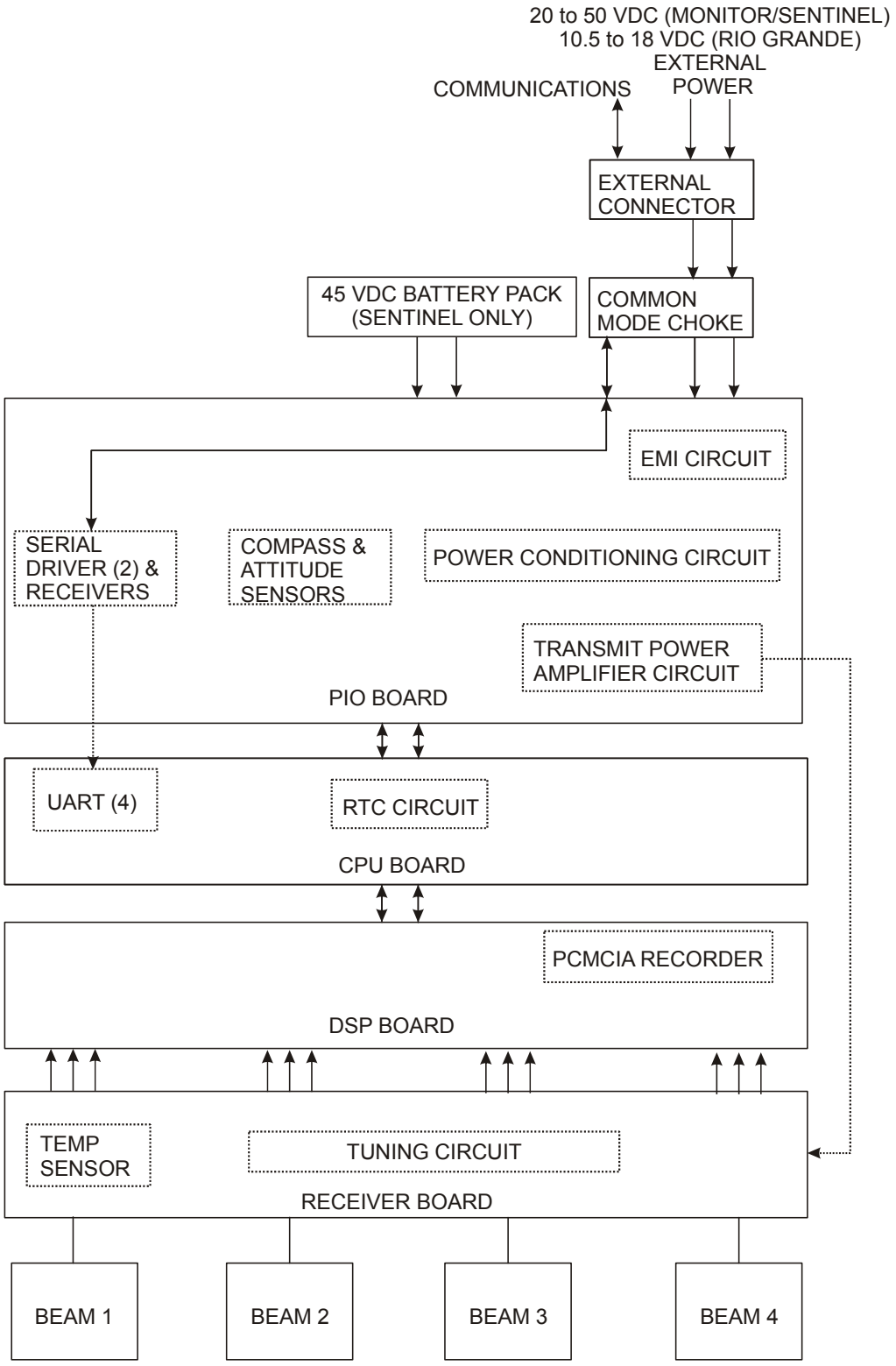

Figure 63. WorkHorse Block Diagram

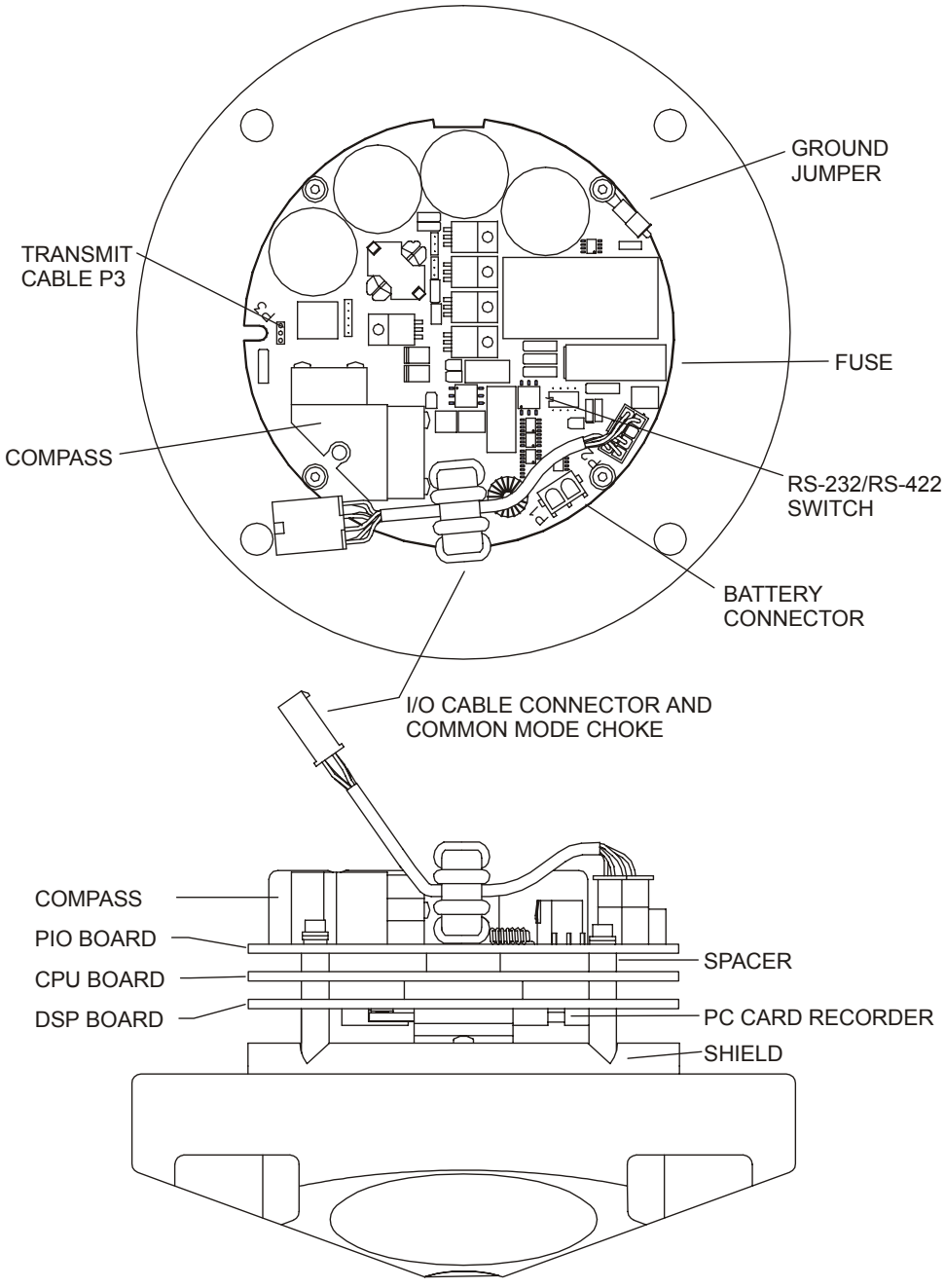

Figure 64. WorkHorse PC Board Locations

6 Specifications

A brief review of ADCP operation may help you understand the specifications listed in this section.

NOTE. The specifications and dimensions listed in this section are subject to change without notice.

The ADCP emits an acoustic pulse called a PING. Scatterers that float ambiently with the water currents reflect some of the energy from the ping back to the ADCP. The ADCP uses the return signal to calculate a velocity. The energy in this signal is the *echo intensity*. Echo intensity is sometimes used to determine information about the scatterers.

The velocity calculated from each ping has a *statistical uncertainty*; however, each ping is an independent sample. The ADCP reduces this statistical uncertainty by averaging a collection of pings. A collection of pings averaged together is an *ensemble*. The ADCP's maximum *ping rate* limits the time required to reduce the statistical uncertainty to acceptable levels.

The ADCP does not measure velocity at a single point; it measures velocities throughout the water column. The ADCP measures velocities from its transducer head to a specified range and divides this range into uniform segments called *depth cells* (or *bins*). The collection of depth cells yields a *profile*. The ADCP produces two profiles, one for velocity, and one for echo intensity.

The ADCP calculates velocity data relative to the ADCP. The velocity data has both speed and direction information. If the ADCP is moving, and is within range of the bottom, it can obtain a velocity from returns off the bottom. This is called *bottom tracking*. The bottom track information can be used to calculate the absolute velocity of the water. The ADCP can get absolute direction information from a heading sensor.

The following tables list the specifications for the WorkHorse ADCP. About the specifications:

a. All these specifications assume minimal ADCP motion - pitch, roll, heave, rotation, and translation.

b. Except where noted, this specification table applies to typical setups and conditions. Typical setups use the default input values for each parameter (exceptions include Pings Per Ensemble and Number of Depth Cells). Typical conditions assume uniform seawater velocities at a given depth, moderate shear, moderate ADCP motion, and typical echo intensity levels.

c. The total measurement error of the ADCP is the sum of:

- Long-term instrument error (as limited by instrument accuracy).
- The remaining statistical uncertainty after averaging.
- Errors introduced by measurement of ADCP heading and motion.

d. Because individual pings are independent, the statistical uncertainty of the measurement can be reduced according to the equation:

$$\frac{\text{Statistical Uncertainty for One Ping}}{\sqrt{\text{Number of Pings}}}$$

Table 28: Mariner and Monitor Water Profiling

Depth Cell Size[1]	Nominal range 15m[2] 1200kHz		Nominal range 55m[2] 600kHz		Nominal range 135m[2] 300kHz	
Vertical Resolution	Range[3] (m)	Std. dev.[4] (mm/s)	Range[3] (m)	Std. dev.[4] (mm/s)	Range[3] (m)	Std. dev.[4] (mm/s)
0.25m	12	182				
0.50m	13	66	40	182		
1.0m	15	30	45	66	97	182
2.0m	16	18	50	30	110	66
4.0m			56	18	123	30
8.0m					138	18

NOTES

1. User's choice of depth cell size is not limited to the typical values specified.
2. Longer ranges are available.
3. Range, which depends on cell size, is specified here for BroadBand mode at 5° C, typical ocean backscatter, and nominal 48 VDC power.
4. Broad bandwidth mode single-ping standard deviation

Table 29: Sentinel Water Profiling

Depth Cell Size[1]	Nominal range 15m[2] 1200kHz		Nominal range 55m[2] 600kHz		Nominal range 135m[2] 300kHz	
Vertical Resolution	Range[3] (m)	Std. dev.[4] (mm/s)	Range[3] (m)	Std. dev.[4] (mm/s)	Range[3] (m)	Std. dev.[4] (mm/s)
0.25m	11	182				
0.50m	12	66	36	182		
1.0m	14	30	41	66	86	182
2.0m	15	18	47	30	99	66
4.0m			52	18	112	30
8.0m					126	18

NOTES

1. User's choice of depth cell size is not limited to the typical values specified.
2. Longer ranges are available.
3. Range, which depends on cell size, is specified here for BroadBand mode at 5° C, typical ocean backscatter, and nominal 33 VDC battery power.
4. Broad bandwidth mode single-ping standard deviation

Table 30: Long Range Mode

	Range (m) @ 33VDC	Range (m) @ 48VDC	Depth Cell Size (m)	Std. dev. (mm/s)
1200kHz	19	20	2	35
600kHz	67	70	4	38
300kHz	165	175	8	38

Range, which depends on cell size, is specified here for narrow bandwidth mode at 5° C, typical ocean backscatter, and nominal 33 VDC battery power (Sentinel) and 48VDC input power (Mariner/Monitor).

Table 31: Rio Grande Standard Water Profiling

Bin Size (m)	1200 kHz Rio Grande			600 kHz Rio Grande		
	Minimum Range (m)	Typical Range (m)	Std. dev. (mm/s)	Minimum Range (m)	Typical Range (m)	Std. dev. (mm/s)
0.25m	1.2	14	181			
0.50m	1.7	17	66	1.8	50	181
1.0m	2.7	20	30	2.9	56	66
2.0m	4.8	21	18	5	66	30
4.0m				9.2	75	18

Table 32: Rio Grande Shallow Water Mode

Bin Size (m)	1200 kHz Rio Grande			600 kHz Rio Grande		
	Minimum Range (m)	Typical Range (m)	Std. dev. (mm/s)	Minimum Range (m)	Typical Range (m)	Std. dev. (mm/s)
0.05	0.6	2	10			
0.1	0.7	2	7	0.7	4	8
0.25	1	2	4	1	4	5
0.5				1.6	4	4

Table 33: Rio Grande Shallow Water, Slow Flow Mode

Bin Size (m)	1200 kHz Rio Grande			600 kHz Rio Grande		
	Minimum Range (m)	Typical Range (m)	Std. dev. (mm/s)	Minimum Range (m)	Typical Range (m)	Std. dev. (mm/s)
0.05	0.6	2	115			
0.1	0.7	2	80	0.7	4	83
0.25	1	2	48	1	4	51
0.5				1.6	4	35

Table 34: Bottom Track Profile Parameters

System Frequency	1200kHz	600kHz	300kHz
Maximum Altitude (m)	30	100	260
Minimum Altitude (m)	0.75 (Rio Grande), 0.8 (Mariner)	0.75 (Rio Grande), 1.4 (Mariner)	2

Table 35: Profile Parameters

Velocity accuracy	
1200 and 600kHz	± 0.25% of the water velocity relative to the ADCP ± 2.5mm/s
300kHz	± 0.5% of the water velocity relative to the ADCP ± 5 mm/s
Velocity resolution	l mm/s
Velocity range	± 5m/s (default), ± 20m/s (maximum)
Number of depth cells	1 to 128
Ping rate	2 Hz (typical)

Table 36: Echo Intensity Profile

Vertical resolution	Depth cell size
Dynamic range	80 dB
Precision	± 1.5dB (relative measure)

Table 37: Standard Sensors

Temperature (mounted on transducer)

Range: -5° to 45° C

Precision: ± 0.4° C

Resolution: 0.01°

Tilt

Range: ± 15°

Accuracy: ± 0.5°

Precision: ± 0.5°

Resolution: 0.01°

Compass (fluxgate type, includes built-in field calibration feature)

Accuracy: ± 2°[1]

Precision: ± 0.50[1]

Resolution: 0.01°

Maximum tilt: ± 15°

Note: 1) @ 60° magnetic dip angle, 0.5G total field

Table 38: Transducer and Hardware

Beam angle	20°
Configuration	4 beam, convex
Internal memory	Memory card not included with Navigator, Rio Grande, Monitor, and Mariner models. Sentinel and Long Ranger ADCPs come standard with one memory card. Two PCMCIA memory card slots are available, with the total memory capacity not to exceed 2GB.
Communications	Serial port selectable by switch for RS-232 or RS-422. ASCII or binary output at 1200 to 115,400 baud.

Table 39: Environmental Specifications

Operating temperature with or without batteries	-5° to 45°C
Short Term Storage/Shipping (<45days) temperature (Batteries Installed)	-5° to 45°C
Long Term Storage (>45days) temperature (Batteries Installed)	O° C to 21° C
Long Term Storage (>45days) temperature (Batteries Removed)	-30° to 60°C
Long Term (>45days) Battery Storage	Batteries should be stored in cool dry air with a temperature range of O° C to 21° C.
Battery Shelf Life	Use within one year.

CAUTION. Batteries stored for more than 12 months should NEVER be used!

NOTE. Batteries less than 12 months old may be used for any length deployment. For example, if your deployment is going to be 12 months long and the battery label shows it is nine months old, it is safe to use the battery.

Table 40: Power

System	Specification
Sentinel	
DC input	20 to 50 VDC external power supply
Battery Voltage	42 VDC (new), 28 VDC (depleted)
Battery Capacity	400 watt hours @ 0° C
External Battery Pack	42 VDC (new), 28 VDC (depleted). Holds up to two 400 watt hour batteries
Transmit	16W @ 35V (1200kHz), 37W @ 35V (600kHz), 115W @ 35V (300kHz)
Monitor	
DC input	20 to 50 VDC external power supply or 42 VDC External Battery Pack
Transmit	22W @ 48V (1200kHz), 60W @ 48V (600kHz), 190W @ 48V (300kHz)
Mariner	
Deck Box Input	12 VDC, 20 to 50V DC external power supply, 110 to 220 VAC
Transmit	22W @ 48V (1200kHz), 60W @ 48V (600kHz), 190W @ 48V (300kHz)
Rio Grande	
DC Input	10.5 to 18 VDC
Transmit	35W @ 13V (600kHz), 25W @ 13V (1200kHz)

7 Outline Installation Drawings

The following drawings show the standard Workhorse Monitor, Sentinel, Rio Grande, Mariner, and Mariner Deck Box dimensions and weights.

Table 41: Outline Installation Drawings

Description	Drawing #
Mariner Deck Box	961-6031
External Battery Case	967-6007
6000 meter WorkHorse Monitor	967-6008
6000 meter WorkHorse Sentinel	967-4002
1000 meter WorkHorse	967-6009
600 kHz Rio Grande	967-6025
1200 kHz Rio Grande	967-6026
1200 kHz Mariner	967-6032
300/600 kHz Mariner	967-6033
1200 kHz Monitor/Sentinel	967-6034
300/600 kHz Monitor/Sentinel	967-6035
300/600 kHz 500 meter Monitor/Sentinel	967-6044
1200 kHz 500 meter Monitor/Sentinel	967-6045

NOTE. If you are having difficulty reading the text on the Outline Installation drawings, please use the electronic documentation. The documentation CD allows you to zoom in and rotate the graphics.

CAUTION. Outline Installation Drawings are subject to change without notice. Verify you have the latest version of the drawing by contacting RDI before building mounts or other hardware.

961-6031

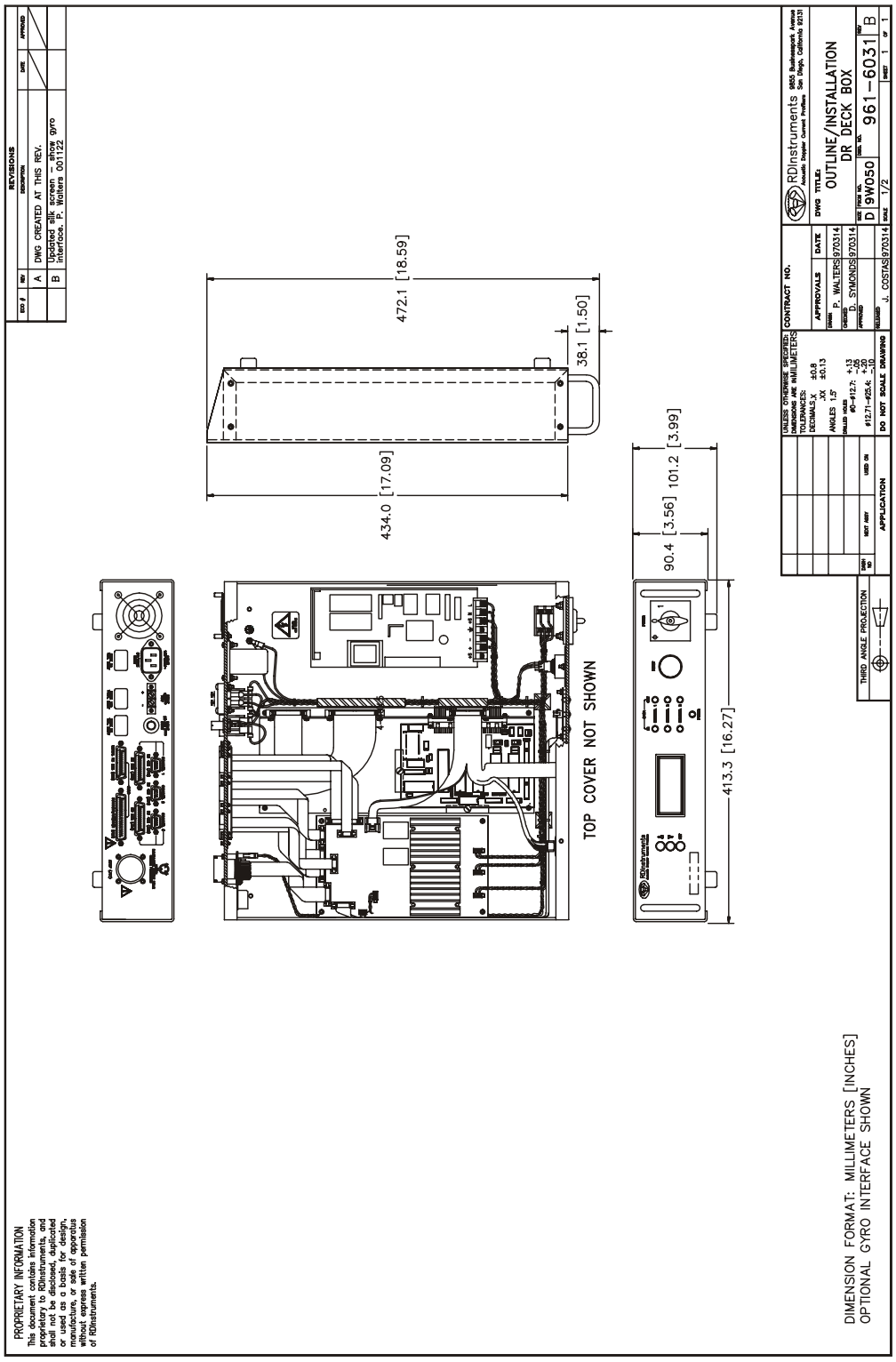
REVISIONS
A DWG CREATED AT THIS REV.
B Updated silk screen – show gyro interface. P. Walters 001122
472.1 [18.59]
38.1 [1.50]
434.0 [17.09]
90.4 [3.56]
101.2 [3.99]
413.3 [16.27]
TOP COVER NOT SHOWN
PROPRIETARY INFORMATION
This document contains information proprietary to RDInstruments, and shall not be disclosed, duplicated or used as a basis for design, manufacture, or sale of apparatus without express written permission of RDInstruments.
DIMENSION FORMAT: MILLIMETERS [INCHES]
OPTIONAL GYRO INTERFACE SHOWN
RDInstruments
OUTLINE/INSTALLATION
DR DECK BOX
D 9W050 961-6031 B
1/2
1 OF 1
P. WALTERS 970314
D. SYMONDS 970314
J. COSTAS 970314
DO NOT SCALE DRAWING
APPLICATION
THIRD ANGLE PROJECTION

967-6007

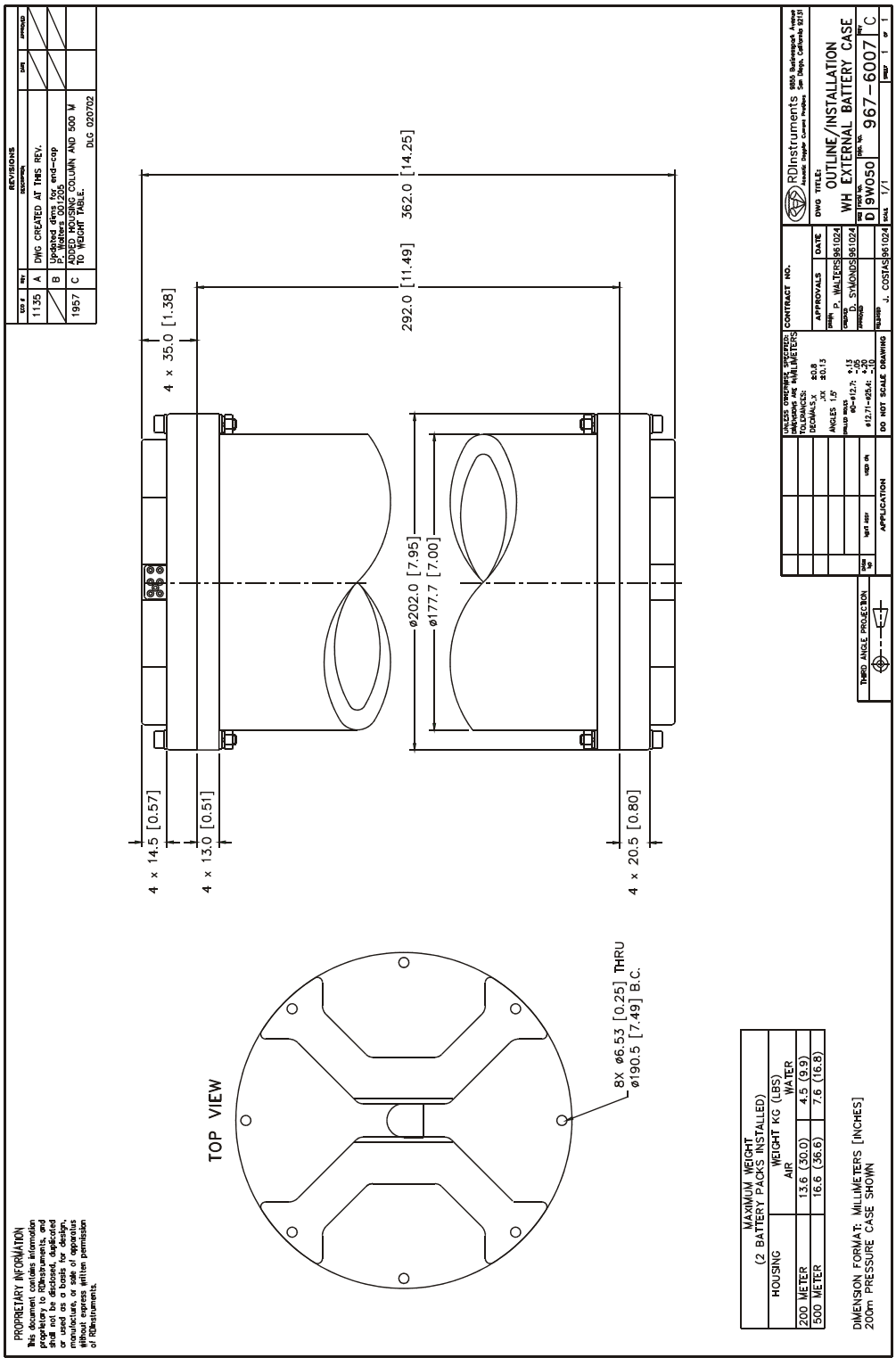
REVISIONS
1135 A DWG CREATED AT THIS REV.
B Updated dims for end-cap P. Walters 001205
1957 C ADDED HOUSING COLUMN AND 500 M TO WEIGHT TABLE. DLG 020702
362.0 [14.25]
292.0 [11.49]
4 x 35.0 [1.38]
ø202.0 [7.95]
ø177.7 [7.00]
4 x 14.5 [0.57]
4 x 13.0 [0.51]
4 x 20.5 [0.80]
TOP VIEW
8X ø6.53 [0.25] THRU
ø190.5 [7.49] B.C.
MAXIMUM WEIGHT
(2 BATTERY PACKS INSTALLED)
HOUSING
WEIGHT KG (LBS)
AIR
WATER
200 METER 13.6 (30.0) 4.5 (9.9)
500 METER 16.6 (36.6) 7.6 (16.8)
DIMENSION FORMAT: MILLIMETERS [INCHES]
200m PRESSURE CASE SHOWN
PROPRIETARY INFORMATION
This document contains information proprietary to RDInstruments, and shall not be disclosed, duplicated or used as a basis for design, manufacture, or sale of apparatus without express written permission of RDInstruments.
RDInstruments
OUTLINE/INSTALLATION
WH EXTERNAL BATTERY CASE
967-6007
D 9W050
C
1/1
APPROVALS
DATE
P. WALTERS 961024
D. SYMONDS 961024
J. COSTAS 961024
CONTRACT NO.
DO NOT SCALE DRAWING
APPLICATION
THIRD ANGLE PROJECTION

967-6008 Sheet 1

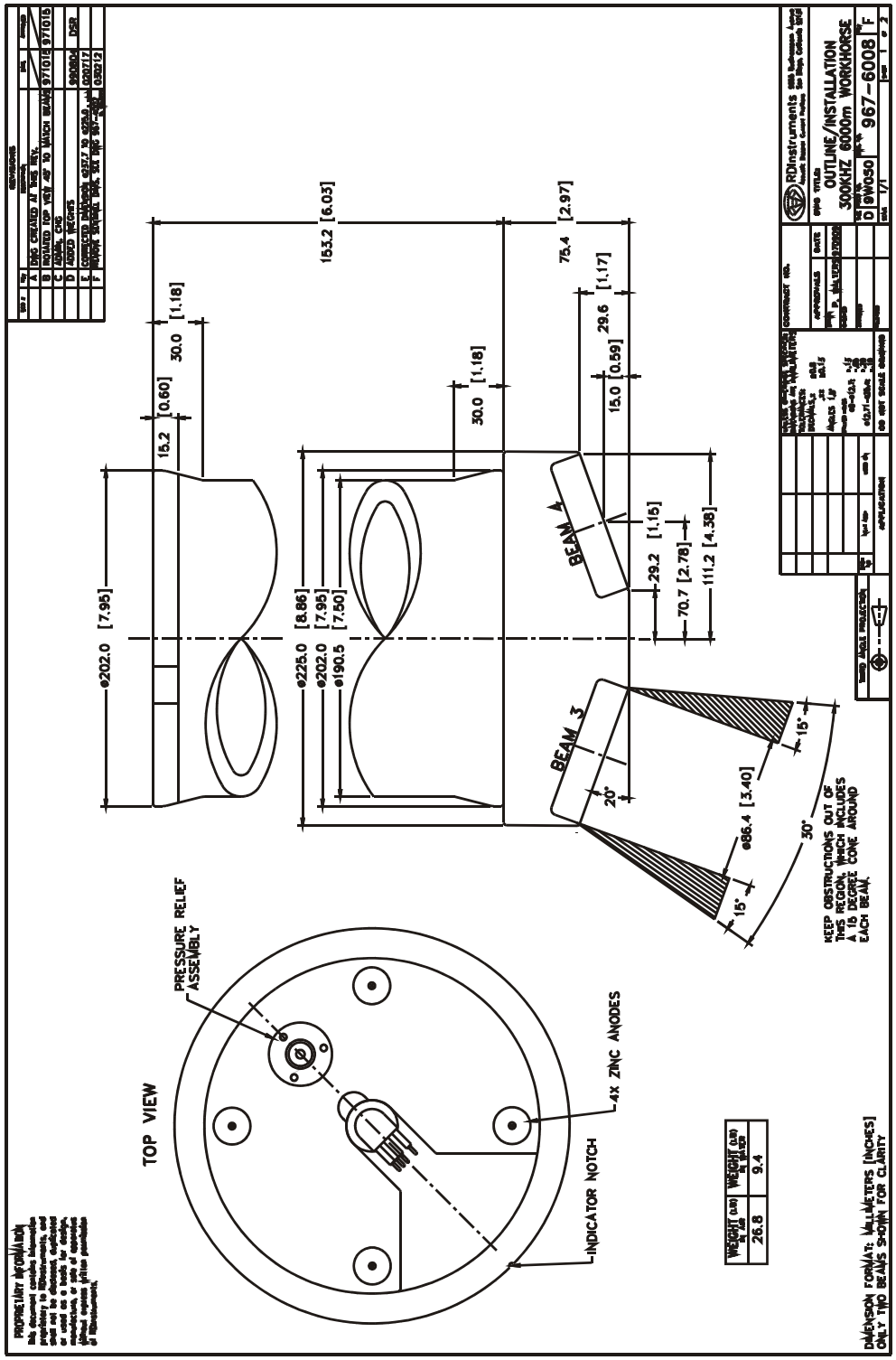

967-6008 Sheet 2

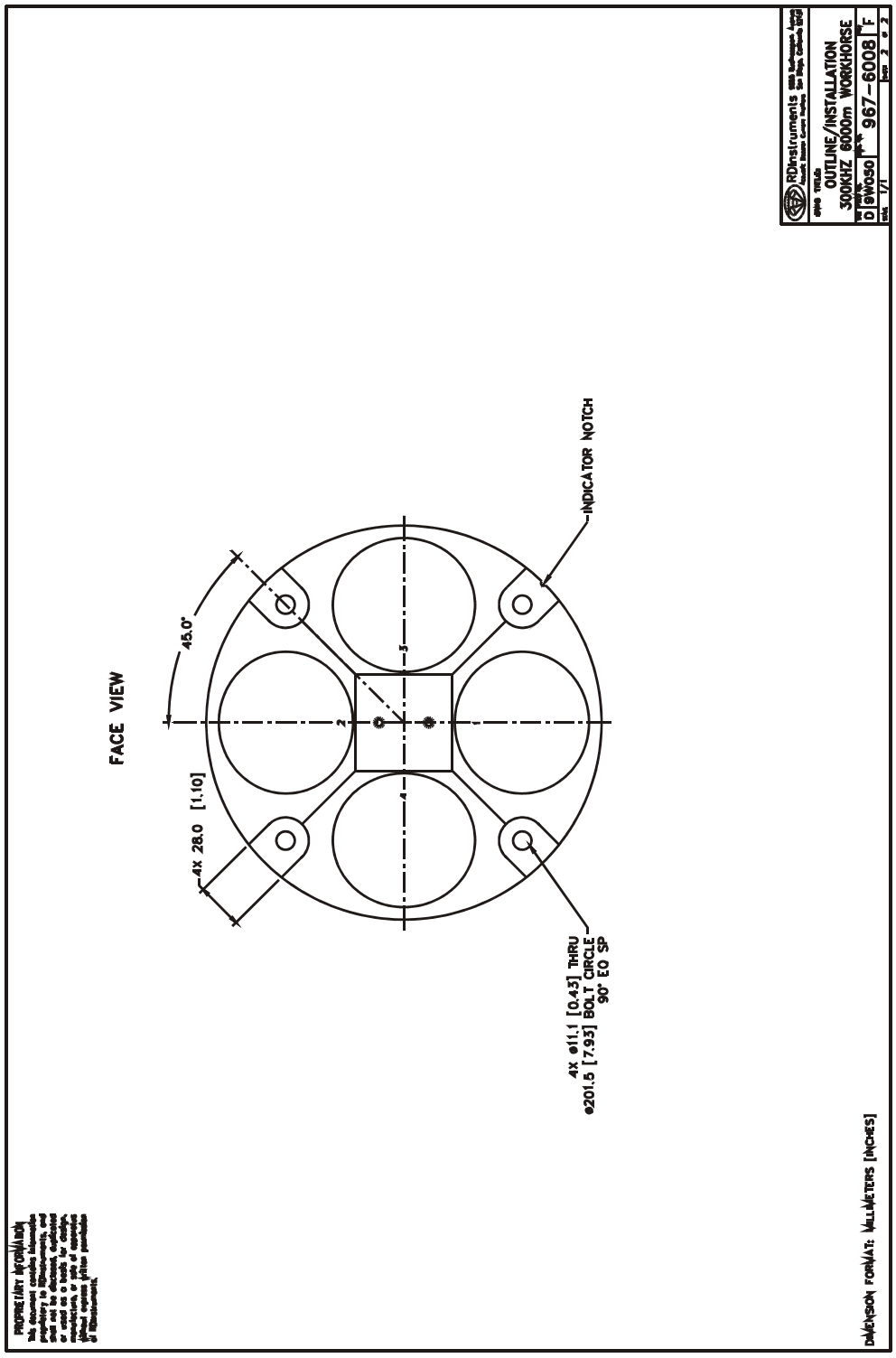

967-4002

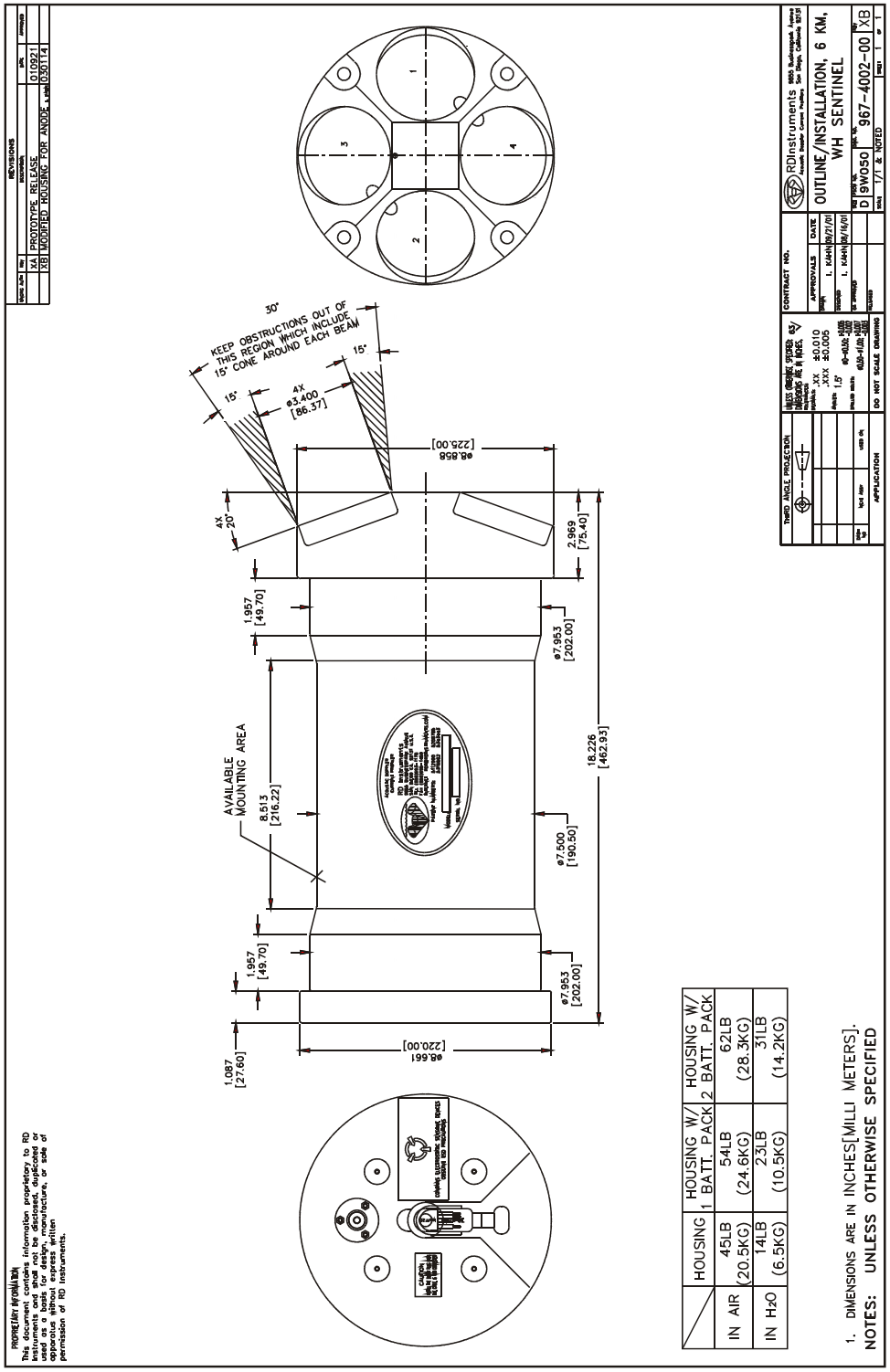

	HOUSING	HOUSING W/ 1 BATT. PACK	HOUSING W/ 2 BATT. PACK
IN AIR	45LB (20.5KG)	54LB (24.6KG)	62LB (28.3KG)
IN H2O	14LB (6.5KG)	23LB (10.5KG)	31LB (14.2KG)

967-6009 Sheet 1

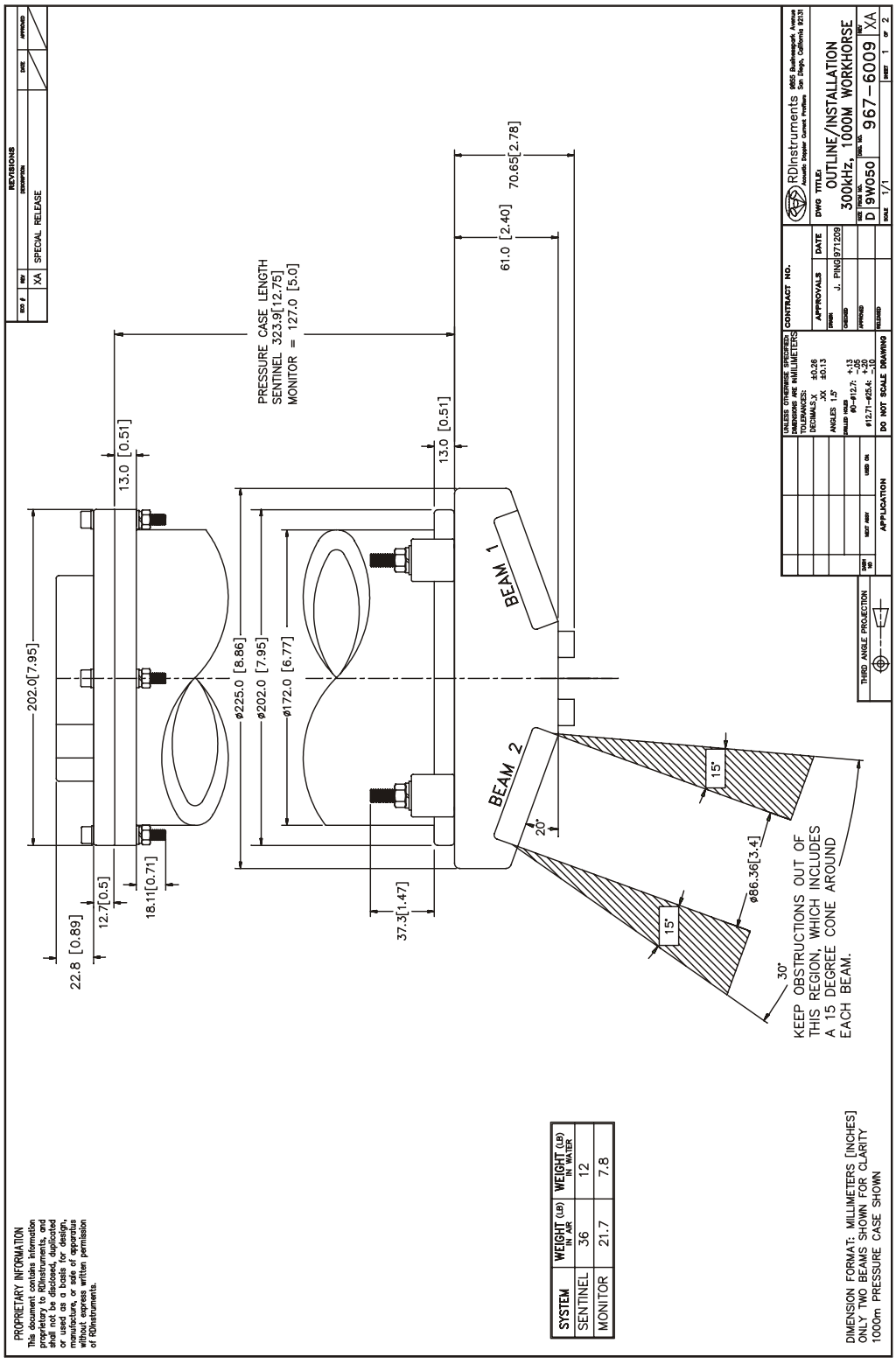

967-6009 Sheet 2

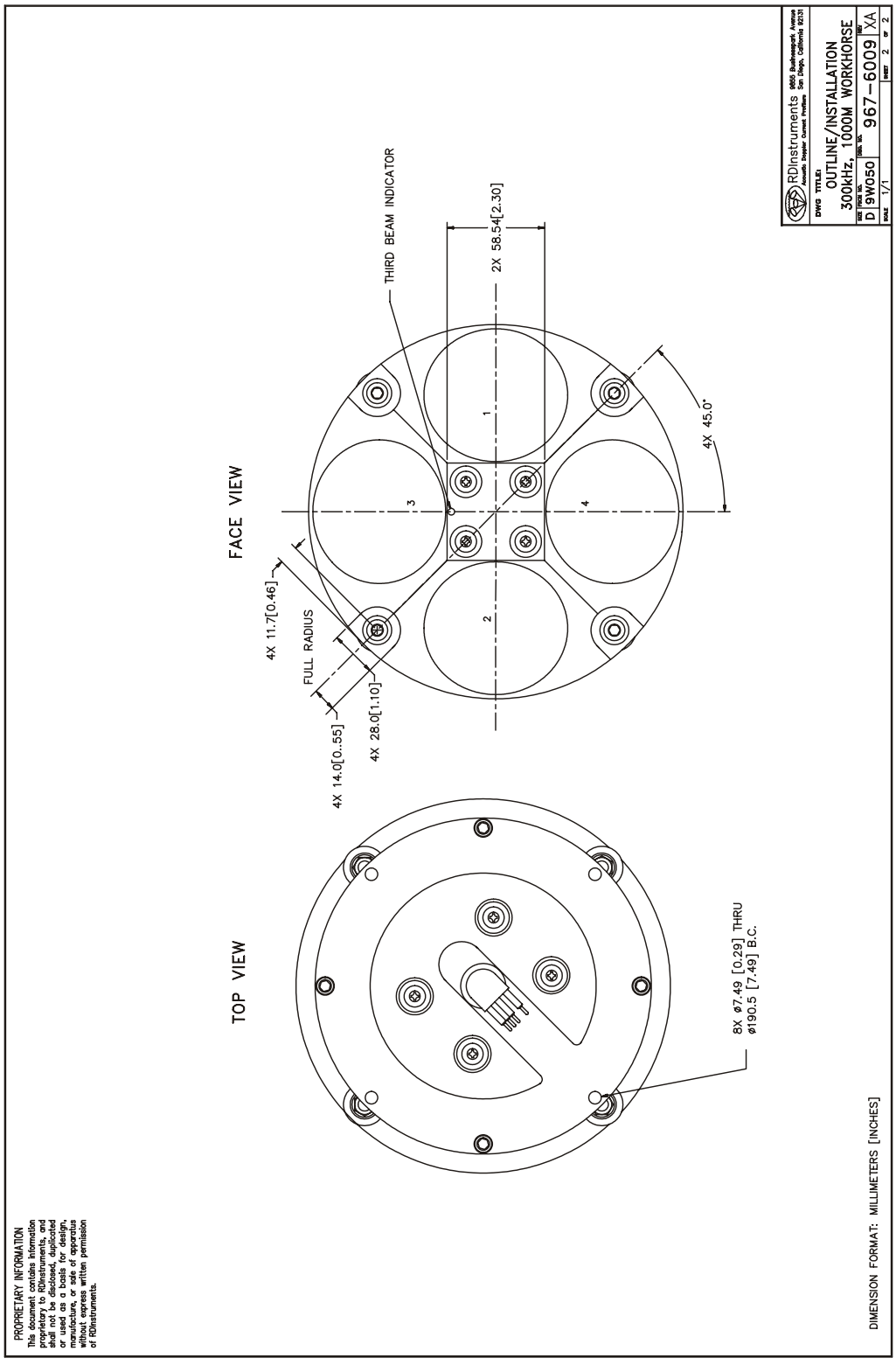

967-6025 Sheet 1

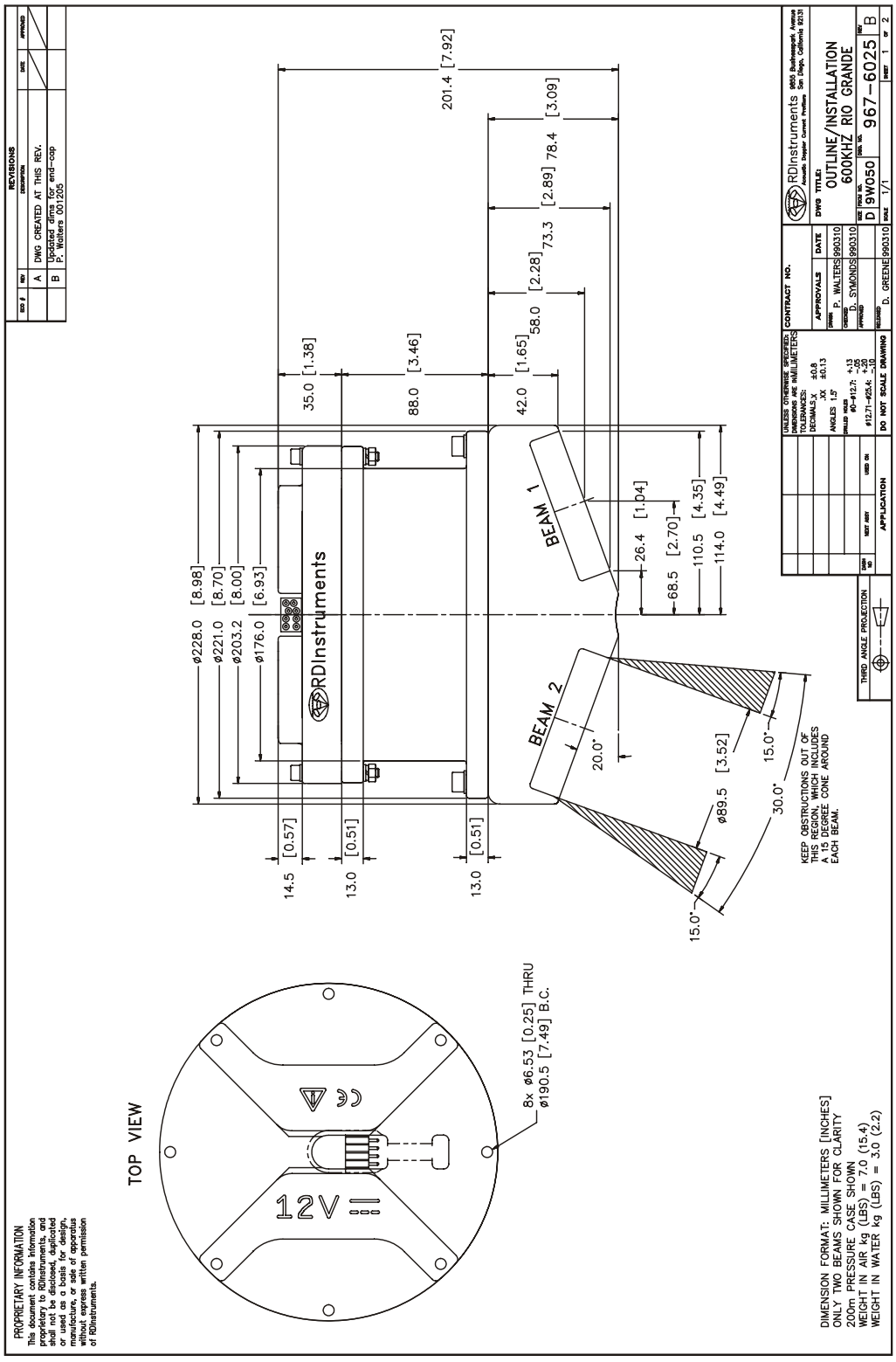

967-6025 Sheet 2

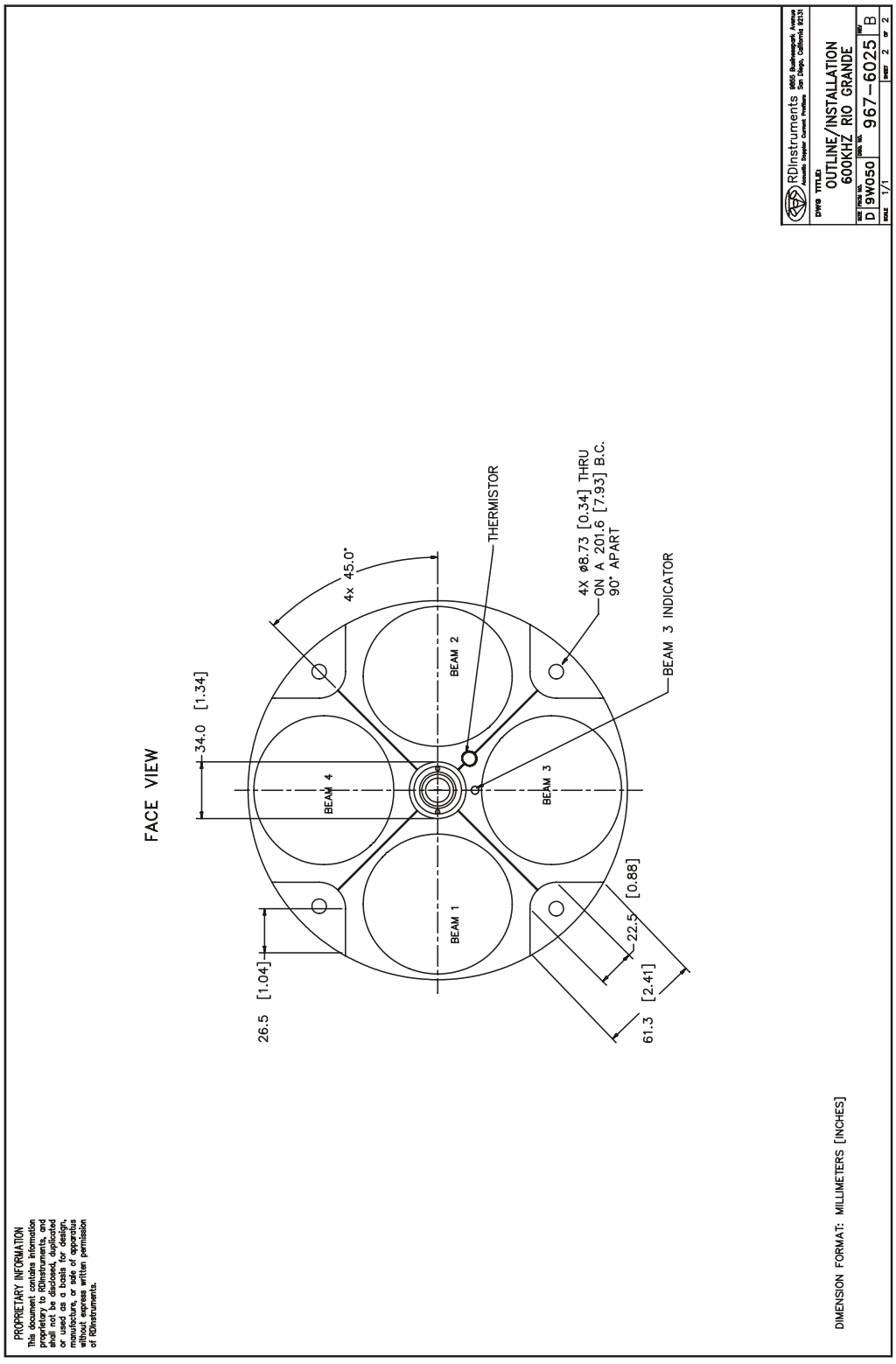

967-6026 Sheet 1

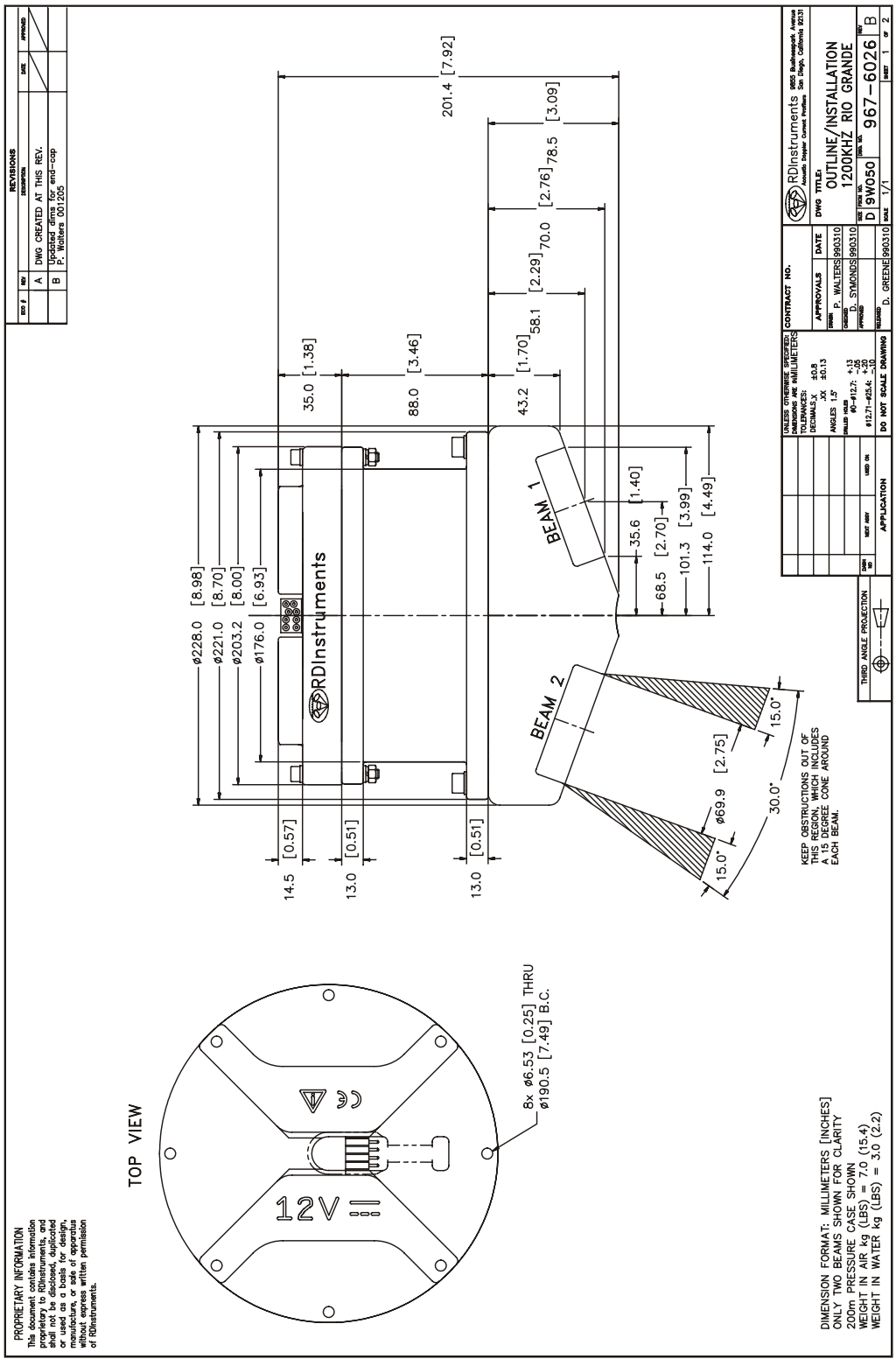

967-6026 Sheet 2

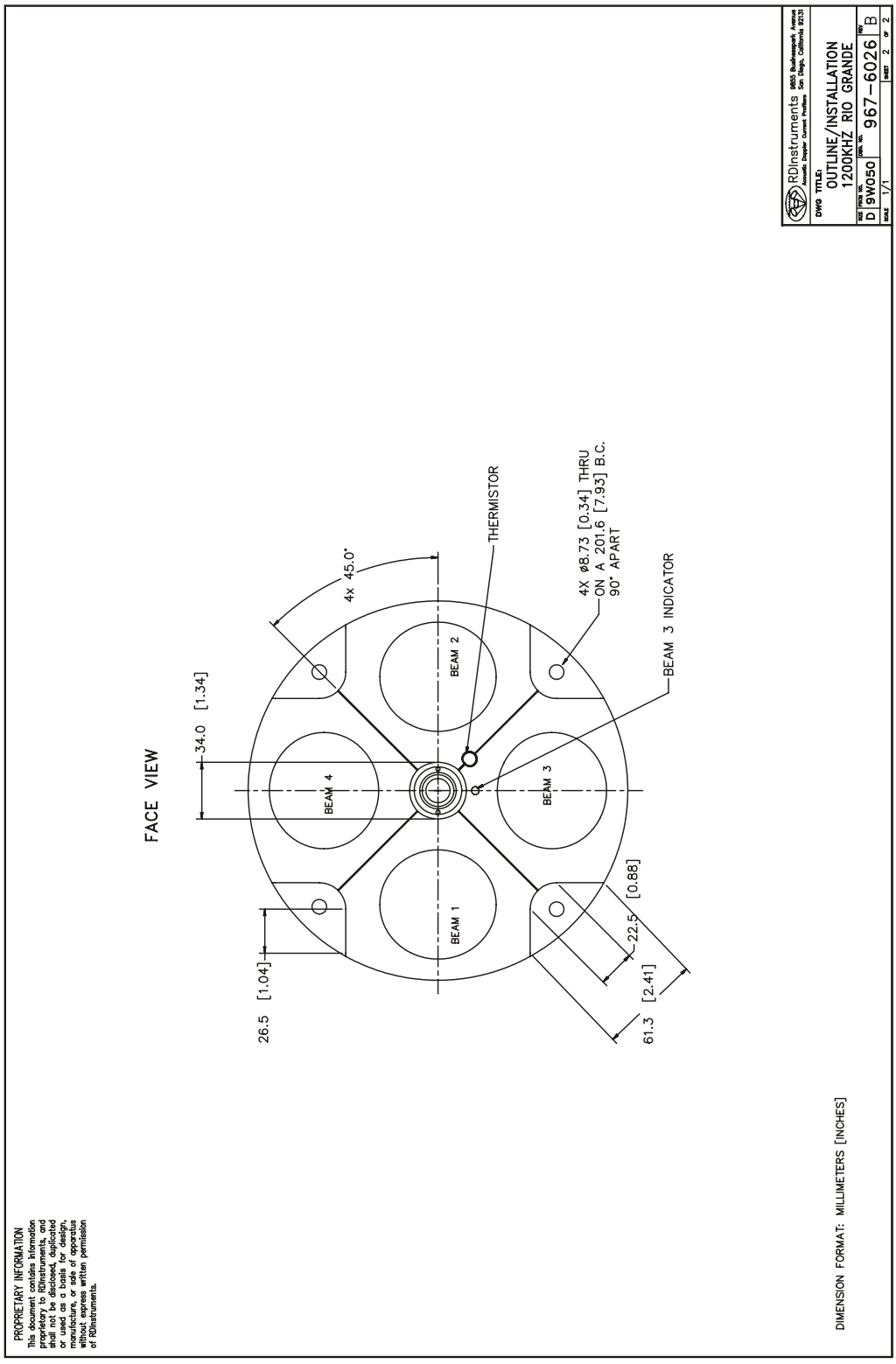

967-6032 Sheet 1

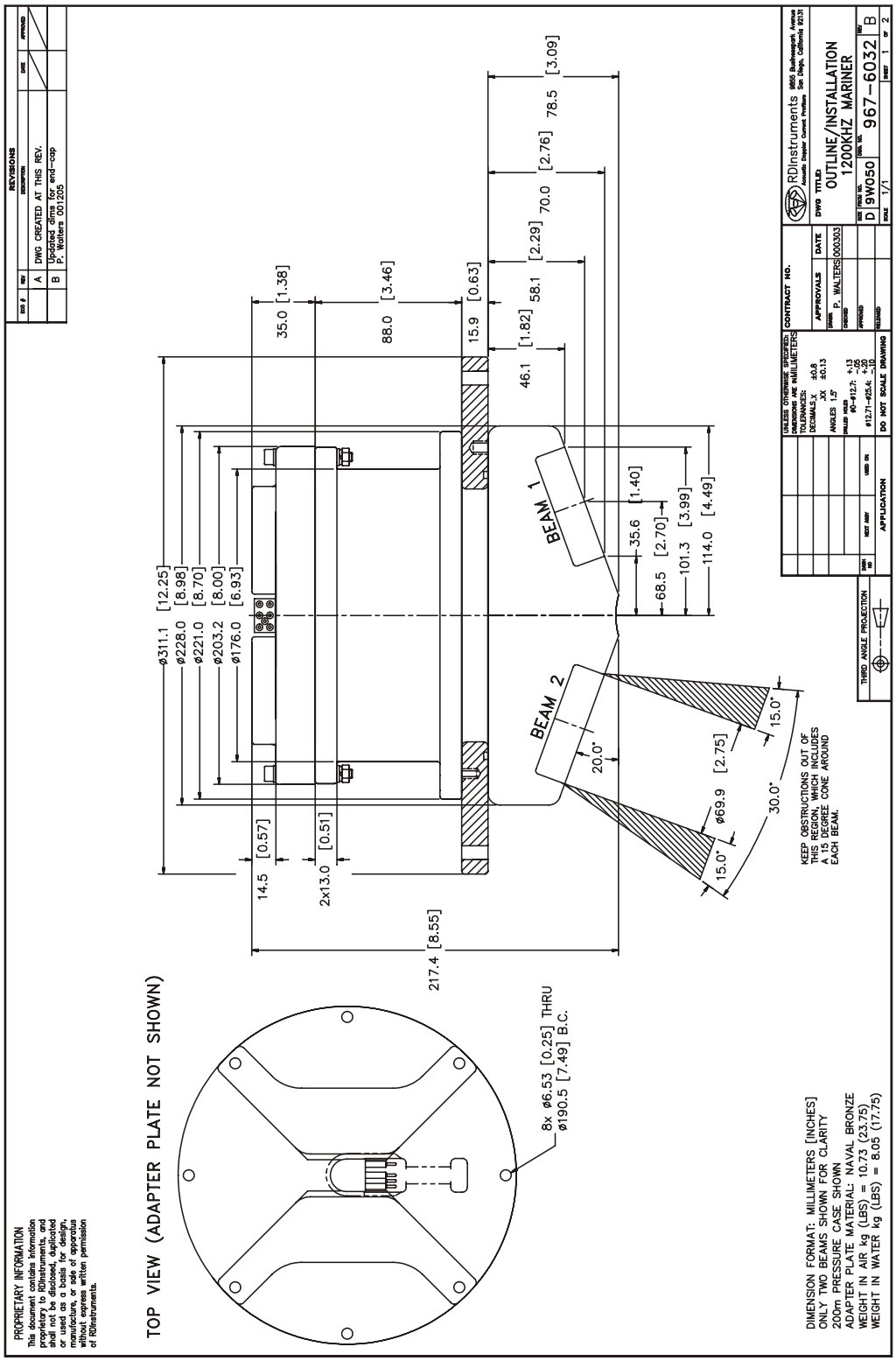

967-6032 Sheet 2

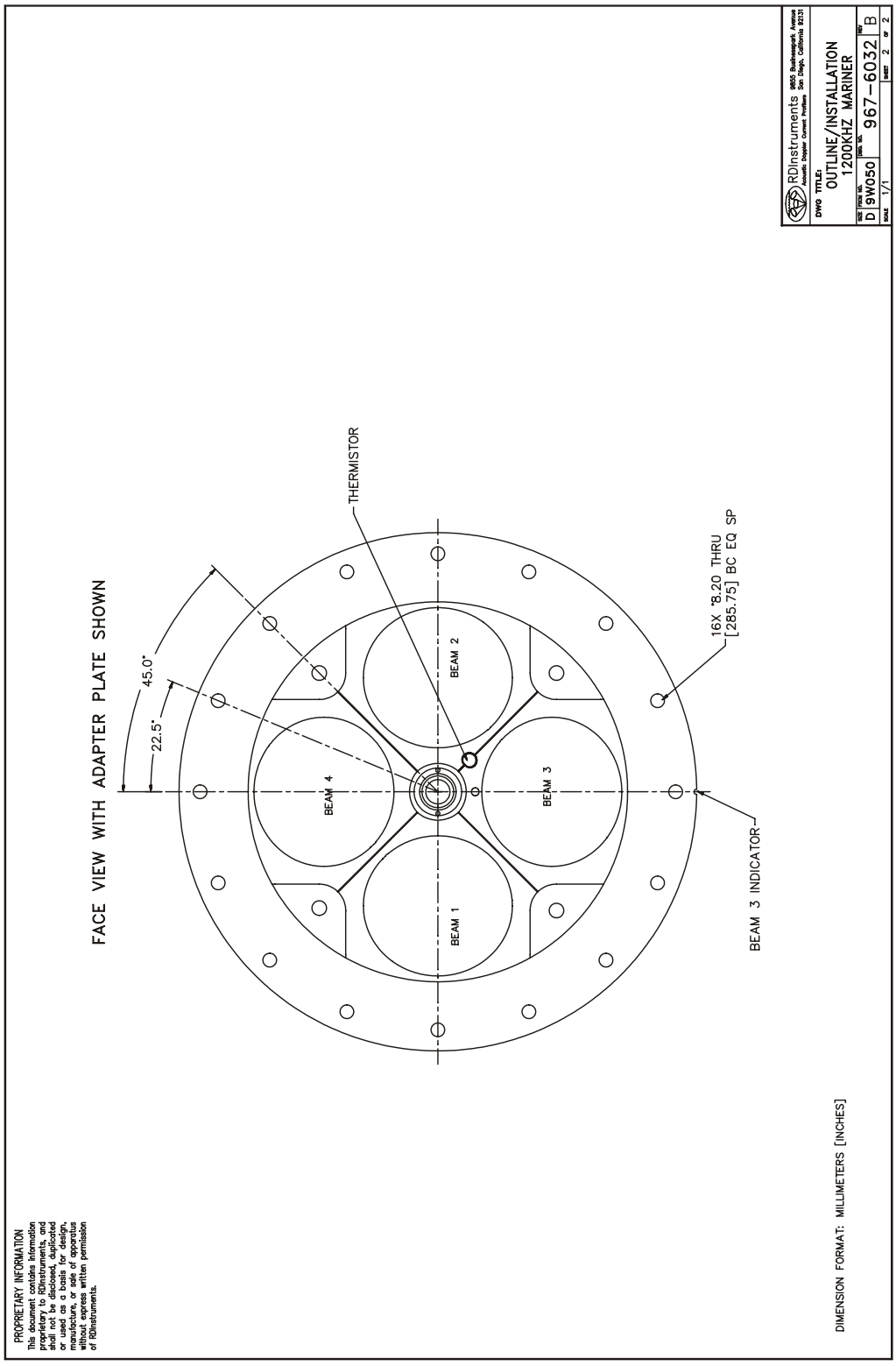

967-6033 Sheet 1

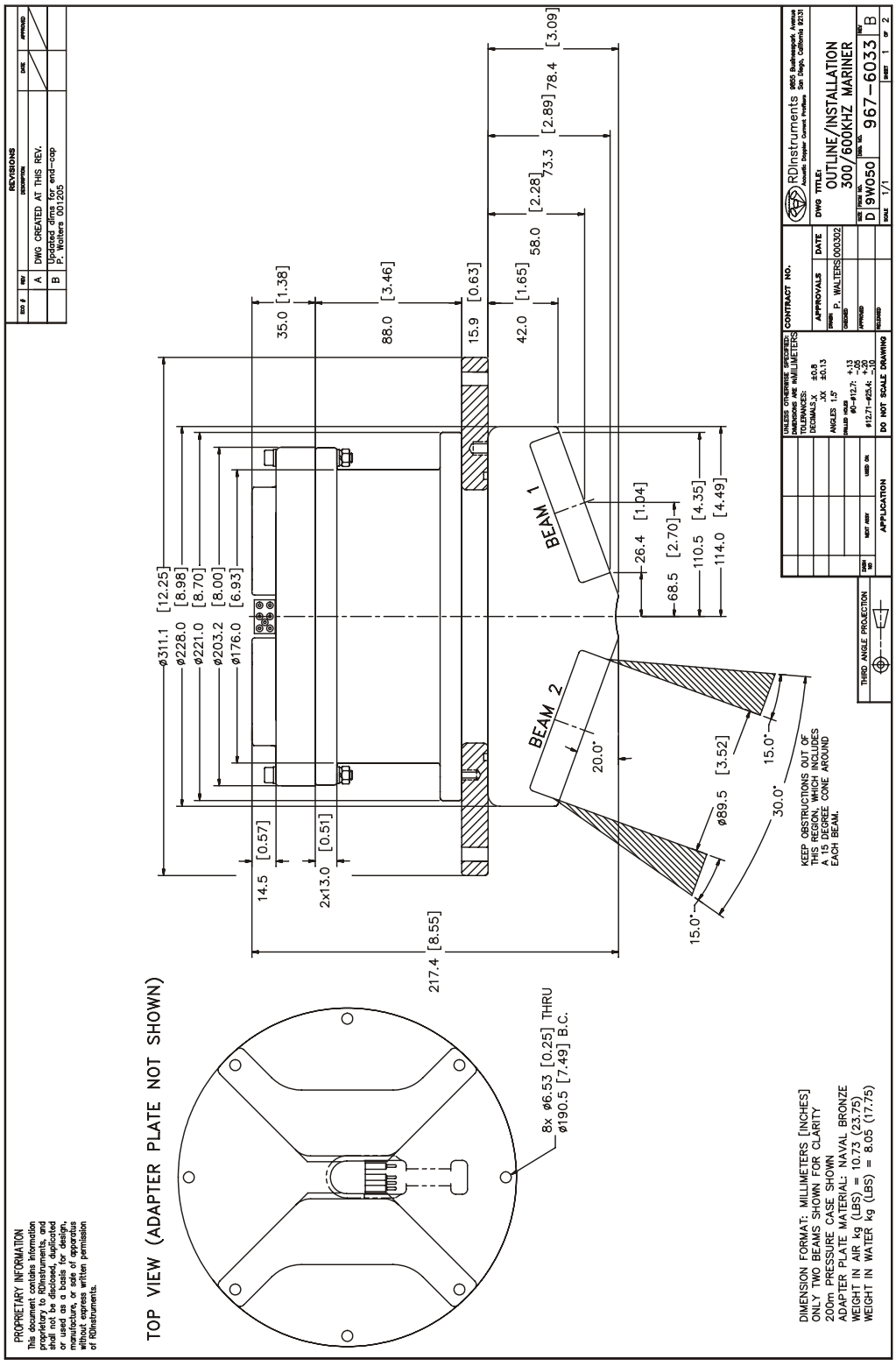

967-6033 Sheet 2

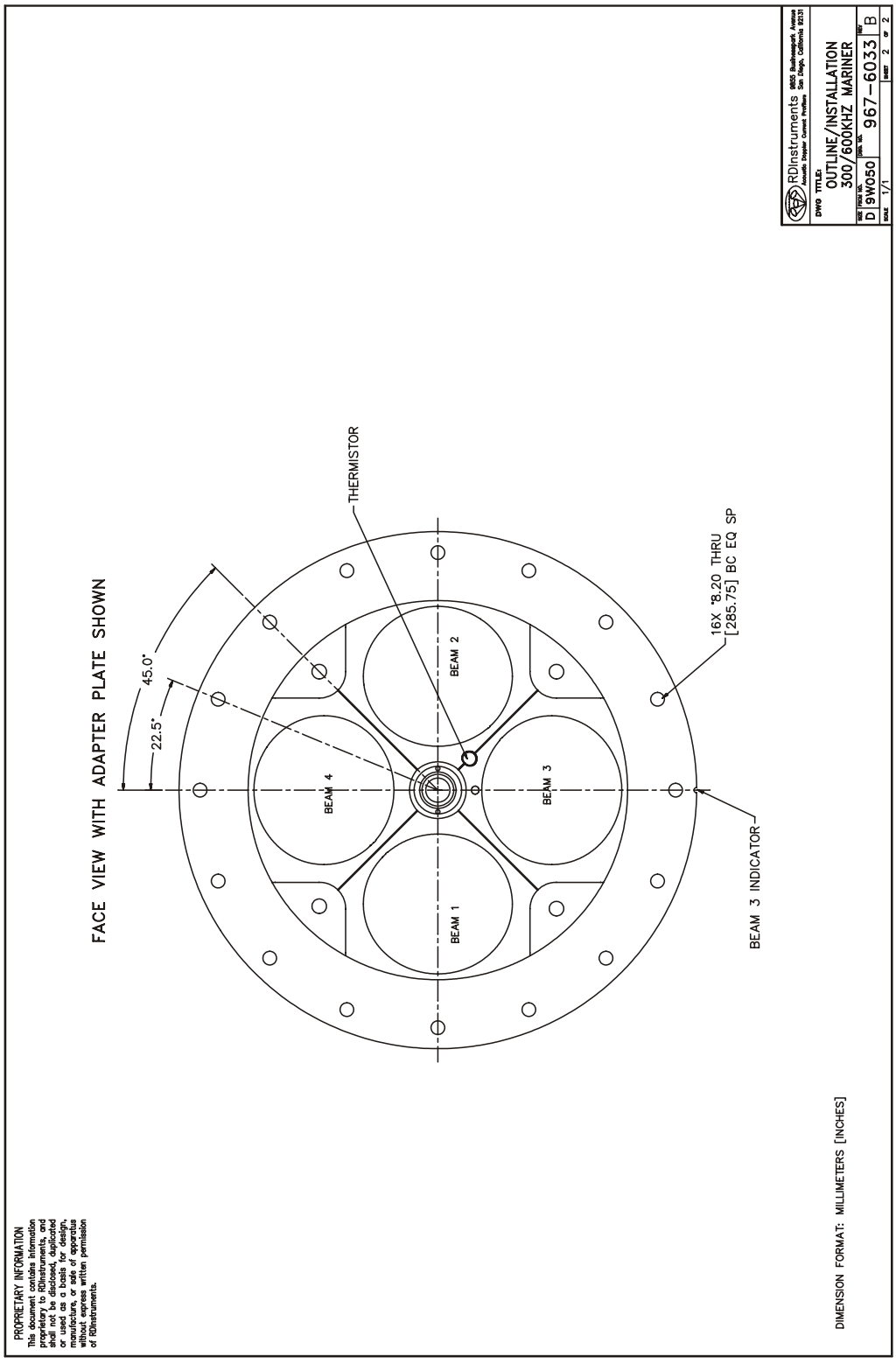

967-6034 Sheet 1

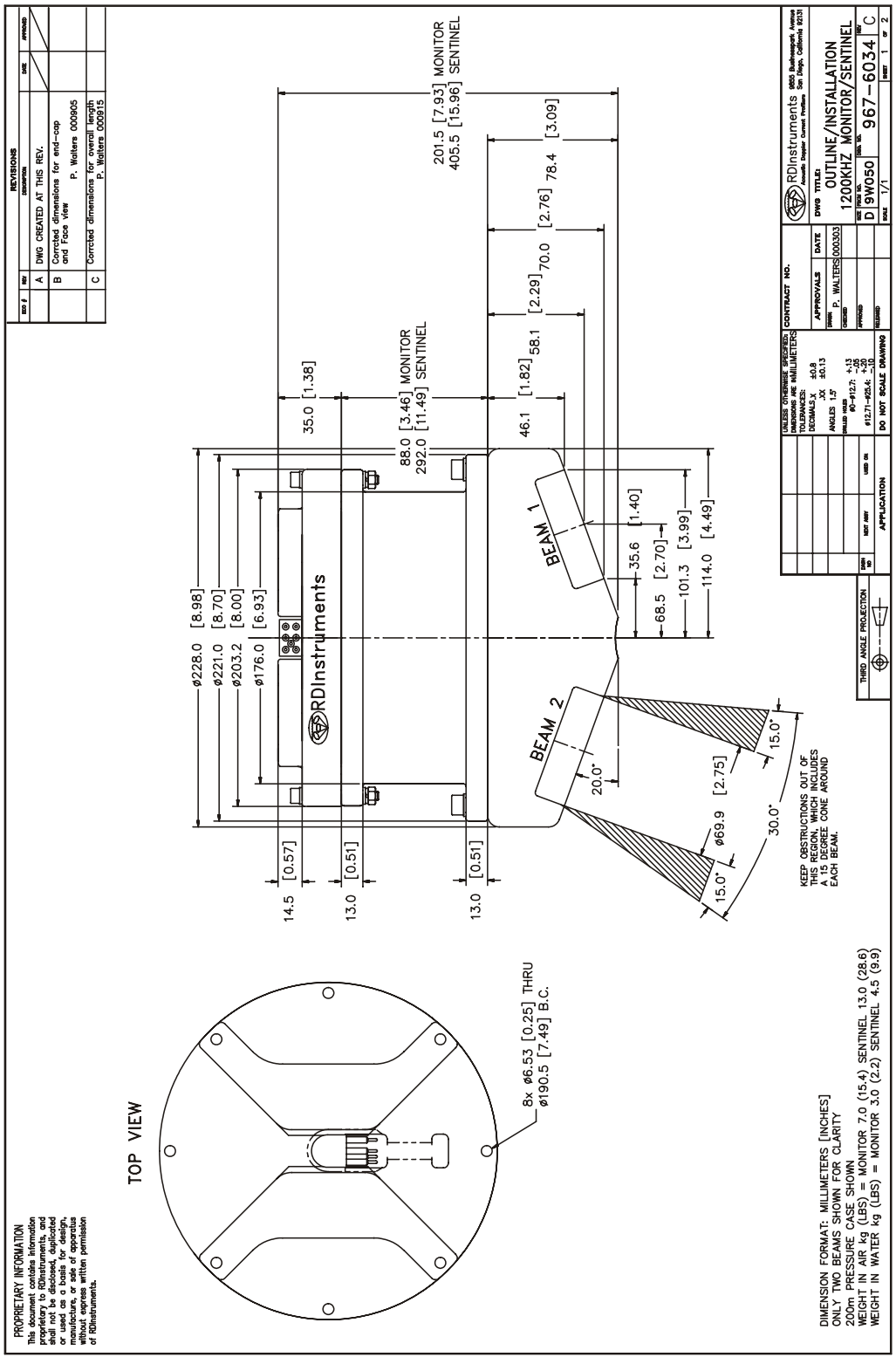

967-6034 Sheet 2

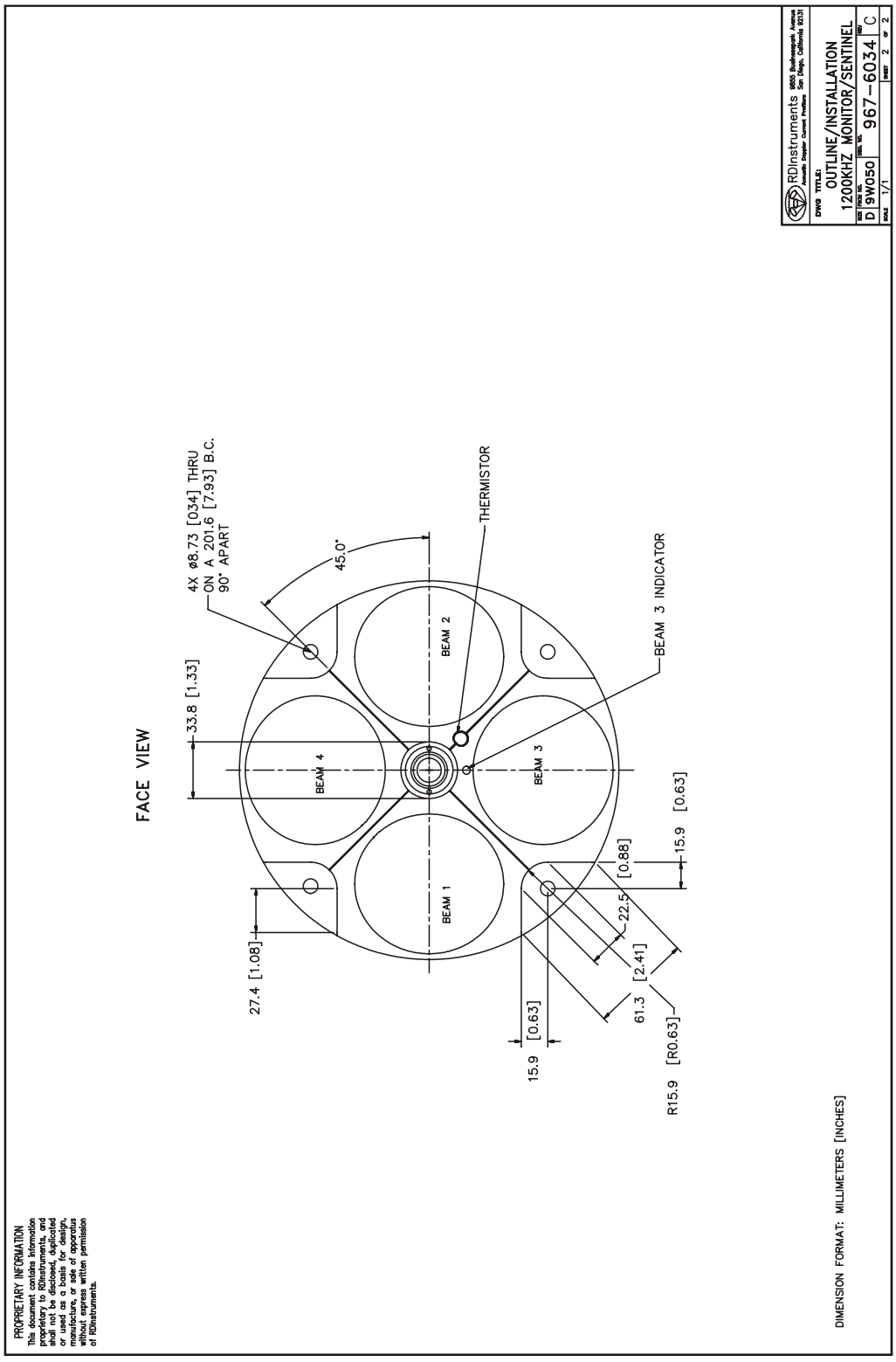

967-6035 Sheet 1

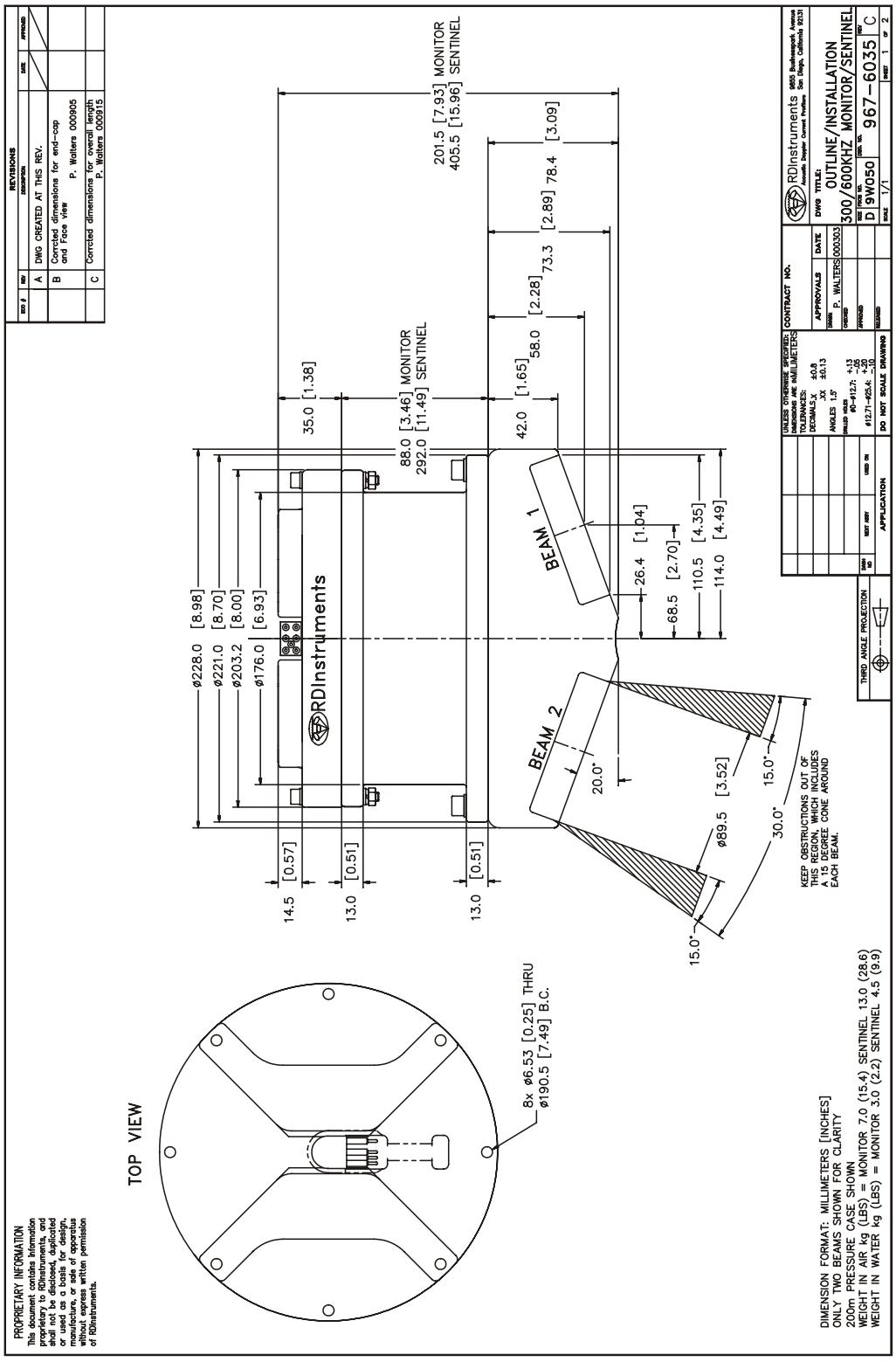

967-6035 Sheet 2

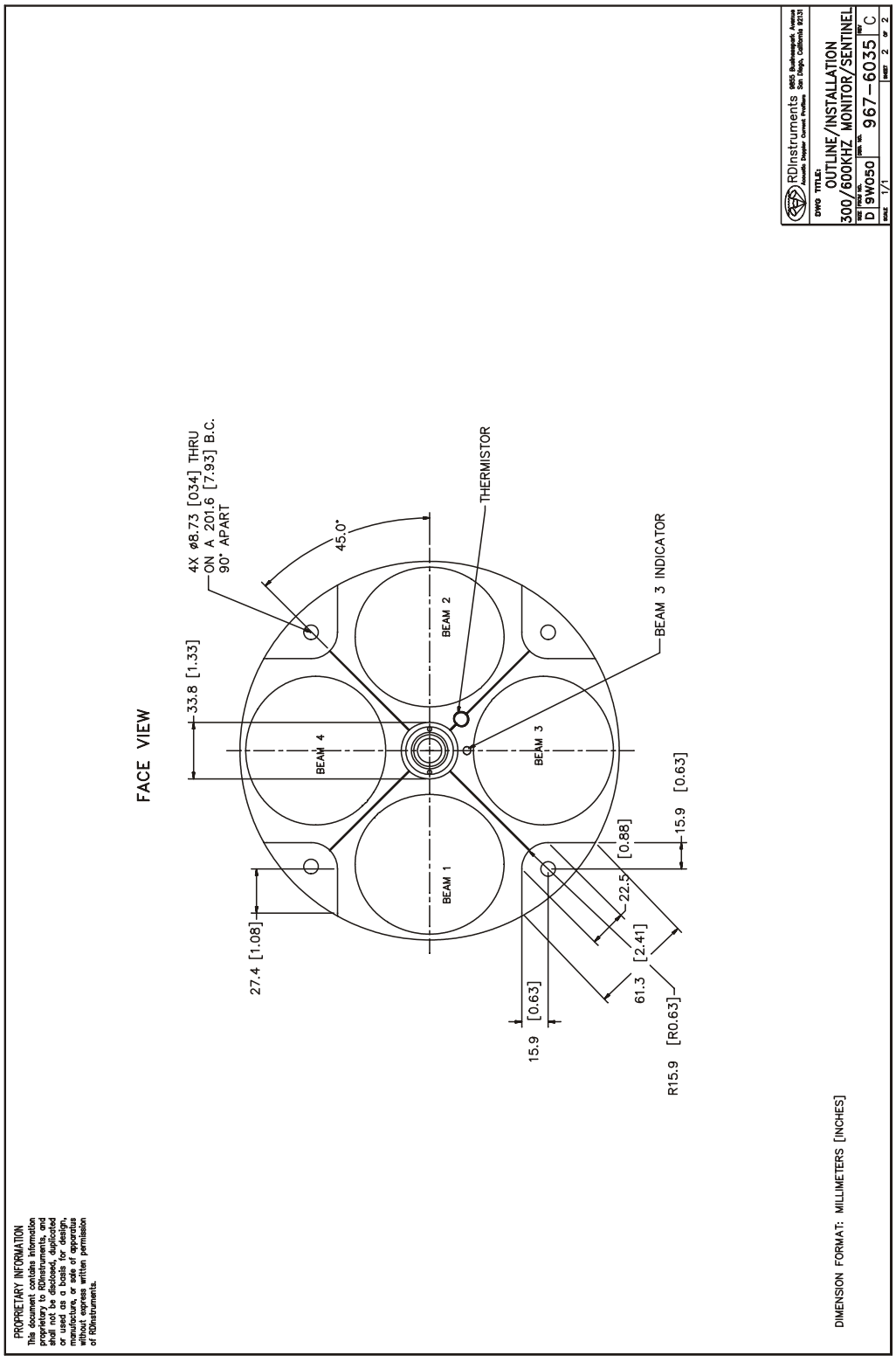

967-6044 Sheet 1

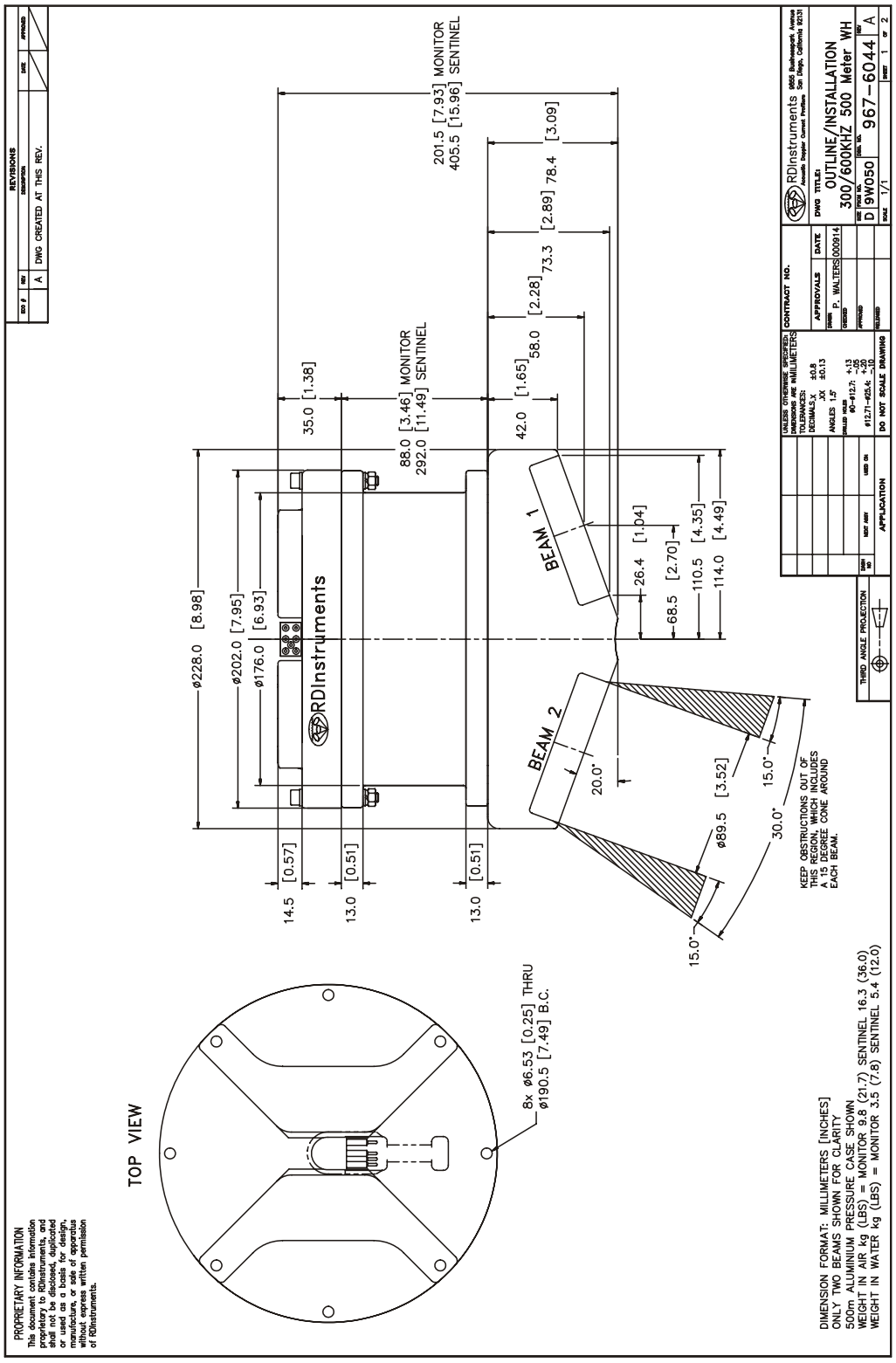

967-6044 Sheet 2

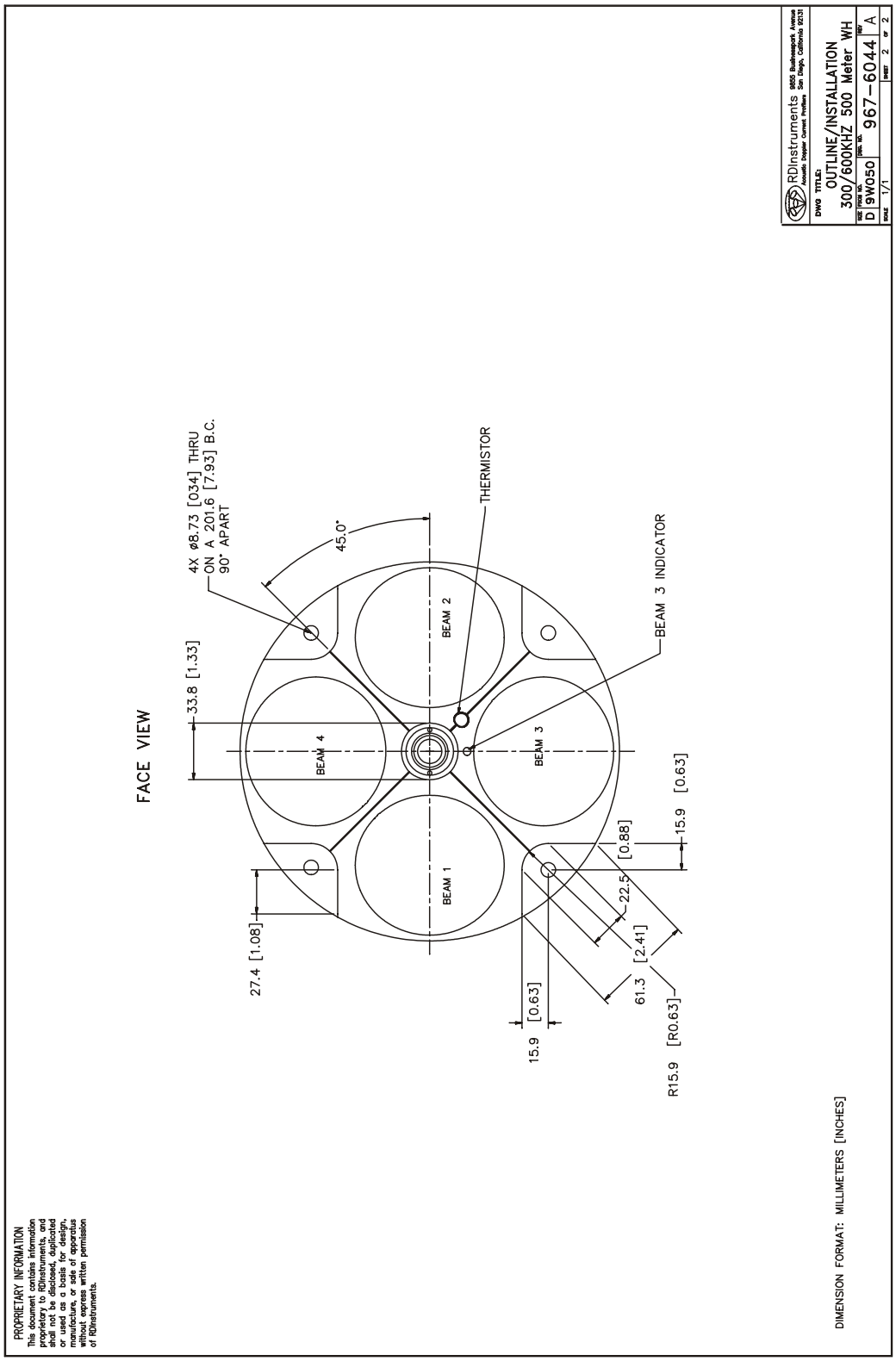

967-6045 Sheet 1

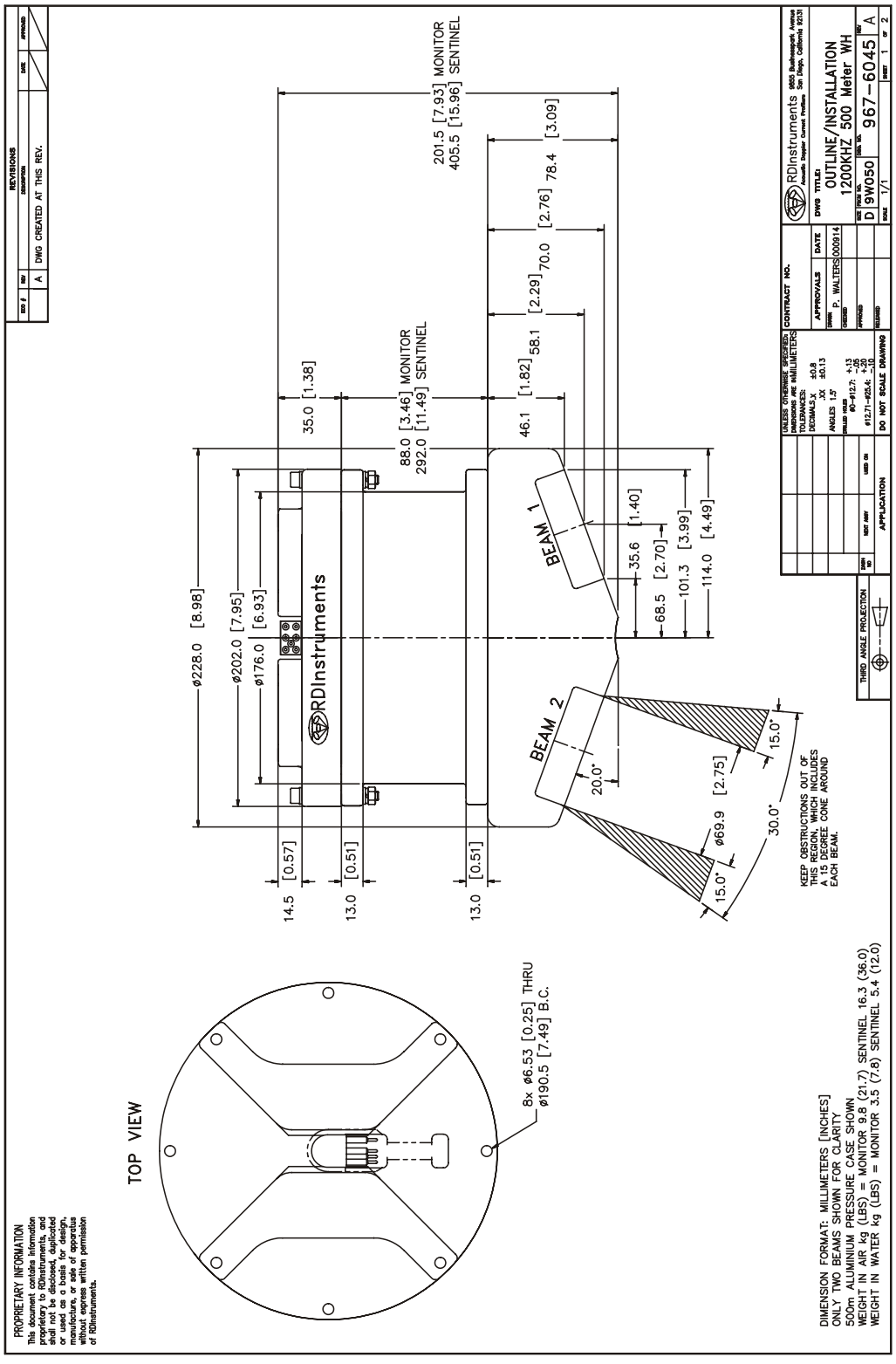

967-6045 Sheet 2

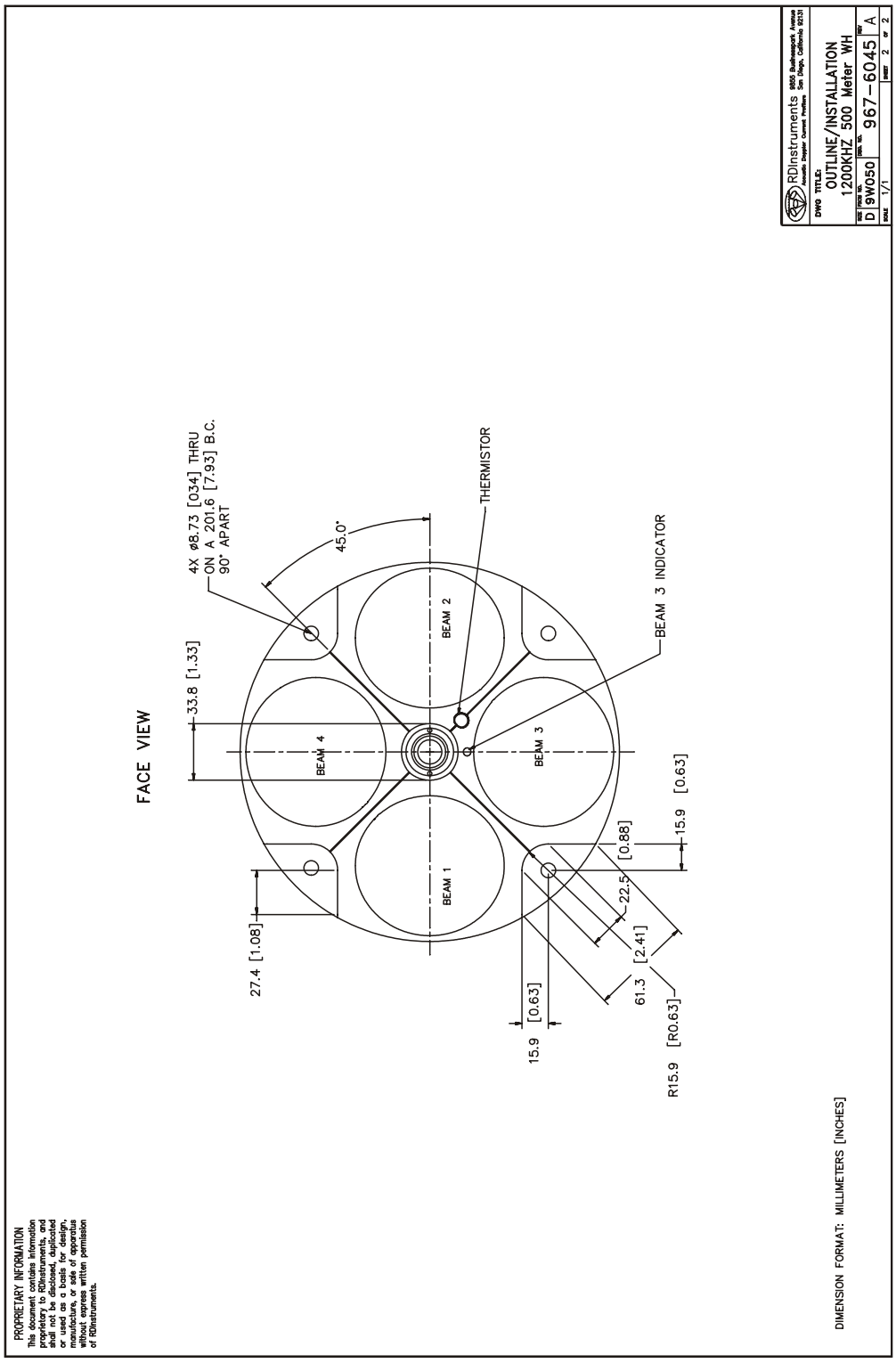

8 Glossary

If, after reviewing this section, you are unable to find the word/jargon in question, please **send us an e-mail** containing that word. Your questions will ensure that our glossary remains an effective reference tool for our customers.

------ *A* ------

Acoustic Doppler Current Profiler (ADCP): An instrument that obtains profiles of water velocity by transmitting sound of known frequency into the water and measuring the Doppler shift of reflections from scatterers, which are assumed to be passively moving with the water.

Acoustic Window: A covering for the hull-side opening of a sea chest that is transparent to sound. A vessel mounted ADCP is typically mounted in a sea chest and the acoustic window helps to isolate it from biofouling organisms and also the flow noise generated by the vessel.

ADCP: Acoustic Doppler Current Profiler

ADCP Coordinates: Profile data is reported in an orthogonal coordinate system as referenced to the instrument. Beam 3 is forward. Sideways is to the right of forward (beam 2 for a down-looking ADCP, beam 1 for an up-looking ADCP).

Ambiguity: ADCPs determine the radial motion between a source and scatterer by measuring the phase change of the reflected signal. Because phase is periodic, this solution is multi-valued. For example, all three of the displacements shown below will return the same phase measurement, which results in ambiguity:

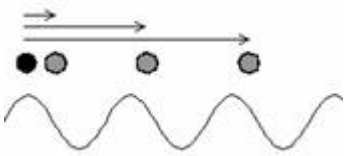

Ambiguity Resolution: A method to count the number of wavelengths included between two points where phase is measured, thereby removing the ambiguity associated with measuring only phase.

Ambiguity Velocity: The maximum allowable radial motion for phase measurements to be unambiguous, corresponding to a maximum observable velocity, beyond which ambiguity resolution is required.

Autonomous Underwater Vehicle (AUV): An unmanned submersible with propulsion, generally capable of navigation and accomplishing specific tasks (such as data gathering).

AUV: Autonomous Underwater Vehicle

------ B ------

Backscatter: 1) The portion of a sound wave that is reflected by scatterers directly back toward the source. 2) A qualitative measurement (in decibels) of scatterer concentration which is calculated in the WinRiver software. This calculation corrects the echo intensity data for sound absorption, beam spreading, transducer temperature, etc. and provides an excellent means of tracking relative concentration (e.g. "Is most of the sediment in the water here or is it there?"). Obtaining a quantitative measurement (e.g. "How many mg/L of bottom sediment are in this parcel of water?") requires a field calibration at the measurement site. There is a third-party software package, *Sediview*, designed for this task.

BBBatch: Utility program to allow automated conversion of a series of raw binary ADCP files to ASCII files.

BBCheck: Utility program that checks the integrity and quality of raw binary ADCP files.

BBConv: Utility program to convert some portion of a raw binary ADCP file into an ASCII file using a decoder file. Several decoder files are included on the RDI Tools CD, for example: extract only distance to first bin, extract only navigation data, etc. Complete documentation on these decoder files as well as information on how to write your own is available.

BBList: Utility program for viewing and converting raw binary ADCP data files. It is a menu-driven program offering a step-by-step process to convert raw binary files to ASCII files.

BBMerge: Utility program to convert comma-delimited ASCII files back into raw binary ADCP format.

BBSlice: A raw data sub-sectioning utility program. BBSlice converts a raw data file into a series of ASCII files, opening a new ASCII file whenever there is a jump in the sequence of ensemble numbers.

BBss: Utility program to calculate the speed of sound when given temperature, salinity and depth.

BBSub: A raw data sub-sectioning utility program. BBSub allows you to extract subsets of raw data from a large raw data file by choosing the starting and ending ensemble number.

BBTalk: Terminal emulator program for direct communication with the CPU of an ADCP or DVL.

Beam Angle: The angle between a transducer beam's main axis and the vertical axis of the ADCP or DVL (typically 20 or 30º).

Beam Coordinates: Profile data is reported as referenced along each beam (i.e. no coordinate transformation is performed upon the raw data).

Beam Spreading: The extent to which the main lobe of energy generated by a transducer fans out, or spreads as an acoustic wave front, with distance from the transducer. This is proportional to λ/d where λ is the wavelength of sound generated and d is the diameter of the transducer. Note: this is why ADCP transducer diameter increases with decreasing operating frequency (and increasing wavelength).

Bin (Depth Cell): A measurement within a profile, generally equivalent to a single-point current meter on a mooring.

Bin Mapping (Depth Cell Mapping): When the ADCP is tilted; the measurements taken at equal distances along each beam are no longer in the same horizontal layer of water. For example, in the image below the tilted ADCP bins do not line up horizontally, they are offset by one bin. In this case the tilted ADCP will offset the bins on the "right" beam by one bin in order to line them up horizontally with the bins on the "left" beam before combining the measurements to compute the velocity.

Blank Zone: The area near the head of an ADCP in which no measurements are taken. This is usually the minimum distance required to avoid collecting data that is potentially contaminated by ringing, but is sometimes extended for other reasons (e.g. to begin measurement well beyond the flow influence of a mounting structure).

Bottom Discharge: When using an ADCP to measure river discharge, it is not possible to measure all the way to the bottom (due to sidelobe contamination and the finite resolution of the depth cells). In order to get an accurate approximation of the total discharge, the flow in this area must be estimated and included, usually by extrapolating the measured velocities to the bottom using a power curve fit.

Bottom Track: In moving platform applications where the bottom is within range of the ADCP or DVL, a special ping can be transmitted to measure the Doppler shift of the signal return from the bottom. If the bottom is not moving, this measurement is a very accurate measurement of the platform velocity. For ADCPs this velocity is typically used to extract the true water velocity profile from the measured velocity profile (by removing the vehicle motion from the measurements). For DVLs, this IS the desired velocity.

Bottom Track Modes: There are currently four bottom tracking modes of operation available from RDI:

> **Bottom Mode 4:** Uses ambiguity resolution, and adjusts lags for reduced variance at higher elevations (or deeper depths).
>
> **Bottom Mode 5:** Specifically designed for reduced variance in shallow water/low elevations. It transmits several pings with computations to best determine depth and speed. This mode is the default mode, but it will automatically switch to Bottom Mode 4 if conditions warrant.
>
> **Bottom Mode 6:** Offers special narrow bandwidth operation to reduce the potential for interference or for stealth. No ambiguity resolution, instead bottom mode 6 requires user input of an approximate operating elevation (or depth).
>
> **Bottom Mode 7:** Similar to bottom mode 5, except that it is optimized for slow-moving platforms in very shallow, high backscatter environments.

Break: A wake up command to an ADCP or DVL that places the instrument in command mode.

Broadband ADCP: An ADCP that uses broadband processing.

Broadband Processing: Use of coded pulses to make multiple measurements of phase with a single ping, and thereby greatly increase the precision of the measurement.

------ C ------

Channel Master: Model name for an ADCP designed to use horizontal profiling for flow monitoring in inland waterways.

Command Mode: The state into which an ADCP or DVL goes upon receiving a break. In this mode the ADCP or DVL is waiting to receive a command. It draws relatively high power, so the ADCP or DVL will go to sleep if no command is received for five minutes.

Correlation: A key quality control parameter, this is essentially a measurement of how much the particle distribution has changed between phase measurements. The less the distribution has changed, the higher the correlation, and the more precise the velocity measurement.

------ D ------

Dead Reckoning: A navigation method where position is estimated by measuring velocity, heading and time from the last known position.

Degaussing: Technique used to remove the magnetic field from RDI battery packs before installation, done to minimize any effects the batteries will have on the magnetic compass.

Depth Cell (Bin): A measurement within a profile, generally equivalent to a single-point current meter on a mooring.

Depth Cell Mapping (Bin Mapping): When the ADCP is tilted; the measurements taken at equal distances along each beam are no longer in the same horizontal layer of water. For example, in the image below the tilted ADCP bins do not line up horizontally, they are offset by one bin. In this case the tilted ADCP will offset the bins on the "right" beam by one bin in order to line them up horizontally with the bins on the "left" beam before combining the measurements to compute the velocity.

DGPS: Differential Global Positioning System

Differential Global Positioning System (DGPS): Satellite-based navigation aid for precise measurement of location. When the bottom is out of range or moving, calculating the distance between DGPS position fixes and dividing by the time between those fixes can be used to measure the platform velocity.

Direct-Reading ADCP: An ADCP intended for real-time operation. Direct-Reading ADCPs do not have internal batteries or an internal recorder.

Discharge: The total flow through a section of a river. Rio Grande ADCPs obtain discharge measurements by transecting the river to measure water velocities, boat velocity, and the cross sectional area of the river and combining these measurements with estimates for the flow in the areas that can not be measured (edge estimates, bottom discharge and top discharge).

Distance Made Good: When measuring transects of data with a moving platform, this is a measure of the actual distance between the platform and the start point (i.e. variations in course track are removed).

Doppler Shift: Named for Johann Doppler (1803-1853), the German physicist who first predicted it: it is the shift in frequency caused by radial motion between a source and an observer. Specifically, $f_D = f_S (v/c)$: Where D is the Doppler-shifted frequency, f_S is the source frequency, v is the relative velocity between source and observer, and c is the speed of sound.

Doppler Velocity Log (DVL): An instrument designed to measure the velocity and elevation of a moving platform with bottom tracking. Most DVLs will switch to measuring velocity relative to the water when the bottom is out of range.

DVL: Doppler Velocity Log.

------ E ------

Earth Coordinates: Profile data is reported in an orthogonal coordinate frame as referenced to the Earth (East, North and Up). "North" can mean magnetic or true, depending on the heading input.

Echo Intensity: A key quality control parameter, echo intensity is a measure of the signal strength intensity returned to the transducer. High echo intensity can show solid targets (e.g. a boundary, obstruction or fish), while low echo intensity can show insufficient scatterers or the limits of profiling range for the environment.

Edge Estimate: When measuring river discharge with an ADCP it is not possible to measure to zero depth at the banks of the river. The flow through this unmeasured area must be approximated in order to obtain an accurate estimate of the total discharge.

Ensemble: A group of measurements (pings) considered together. An ensemble is usually the average of the individual measurements, and has a higher precision than any individual measurement.

Error Velocity: A key quality control parameter that derives from the four beam geometry of an ADCP. Each pair of opposing beams provides one measurement of the vertical velocity and one component of the horizontal velocity, so there are actually two independent measurements of vertical velocity that can be compared. If the flow field is homogeneous, the difference between these vertical velocities will average to zero. To put the error velocity on a more intuitive footing, it is scaled to be comparable to the variance in the horizontal velocity. In a nutshell, the error velocity can be treated as an indication of the standard deviation of the horizontal velocity measurements.

------ F ------

Fish Detection Threshold: Used to identify and mark as bad any velocity measurement that was potentially contaminated by a fish (because fish are generally not passively following the flow). It is a flag on the maximum allowable value for the measured echo intensity return.

Frequency: The number of wave crests passing a given point per unit time.

------ G ------

Gimbals: Frame that will support the weight of an object but allow its free rotation. Gimbals can be constructed to allow free rotation in one, two, or three axes.

GO-DVL: DOS batch file used to configure a Navigator and start data collection with *Shiptrack*.

Gyro: A rapidly spinning device mounted on gimbals to maintain a constant orientation. These devices are commonly used to measure heading on ships because, unlike magnetic compasses, they are unaffected by ferrous metals or by varying electromagnetic fields. They can also be used to measure pitch and roll because, unlike liquid level sensors, they are unaffected by accelerations.

------ H ------

Homogeneity: The extent to which the current measured by all four beams is the same. A key assumption of all ADCP processing is that the currents are horizontally homogeneous across the four beams. This assumption is checked for each measurement by using the error velocity measurement.

Horizontal ADCP (H-ADCP): Instrument designed to measure velocity profiles in a horizontal plane.

------ I ------

Inertial Navigation: Method for estimating the attitude and position of a moving platform (of primary interest here are AUVs) by integrating measurements from gyros and accelerometers. This integration is subject to large errors over time, so DVLs and pressure sensors are commonly incorporated as external inputs to measure and correct these errors.

------ J ------

------ K ------

------ L ------

Lag: A time delay between pulses or pings.

WorkHorse: Model name for Workhorse ADCPs of frequency 75 kHz.

Lowered ADCP (L-ADCP): Technique whereby one or two ADCPs are lowered through the water column (typically on a rosette) to obtain velocity profiles over the full ocean depth. Note that a whole body of research exists on how to properly remove the motion of the rosette from the velocity measurements obtained in this manner.

------ M ------

Main Lobe: The main focus of energy emitted from a transducer. If the transducer were a flashlight, the main lobe would be the visible beam of light.

Mariner: Model name for a Workhorse Monitor ADCP configured for underway current measurement in shallow water (as opposed to the deep water Ocean Surveyor systems).

Modes: RDI offers several modes of operation that are optimized for certain conditions. There are currently five modes of operation for water profiling available from RDI:

Mode 1: General purpose water profiling. This is the most robust profiling mode, designed for the widest variety of measurement applications. Mode 1 can resolve high velocities and can measure over long ranges.

Mode 5: For high resolution profiling in shallow water with low flows. Mode 5 should be used with bottom tracking. It offers the lowest standard deviation per measurement, but is also the most limited in its allowed performance envelope (e.g. low velocity flow, slow platform movement, no high shears or turbulence).

Mode 8: Also for high resolution profiling in shallow water. Mode 8 should also be used with bottom tracking. It has higher standard deviation per measurement than mode 5, but allows a somewhat wider performance envelope.

Mode 11: The latest in our high resolution profiling modes. Intended for the shallowest water, it is also well suited for boundary layer studies. Mode 11 should be used with bottom tracking. It allows smaller depth cells (1 cm), more depth cells, and has improved signal processing which allows faster ping rates and a wider performance envelope than modes 5 and 8. Mode 11 is intended to supercede mode 5.

Mode 12: Offers increased resolution (1 cm depth cells) and uses multiple sub-pings to improve the standard deviation of each measurement. Mode 12 allows measurement of fast moving, shallow water; and can also be used to improve the standard deviations of any measurement (any range, any velocity) when the ADCP heading is fixed or reasonably steady.

Monitor: Model name for a direct reading Workhorse ADCP.

Moving Bottom: Some rivers carry such a heavy sediment load that they do not have a clearly identifiable bottom. In essence, the mud just keeps getting thicker and slower with depth. In such environments it is not un-

common for bottom tracking measurements to lock onto a sediment layer that is still moving, resulting in a bias to the bottom tracking velocity. This is especially important for river discharge measurements, where the vessel's navigation must be substituted for the bottom track velocity to obtain accurate results.

------ N ------

Navigator: Model name for the RDI Doppler Velocity Log.

Narrowband ADCP: An ADCP that uses narrowband processing.

Narrowband Processing: Uses a single pulse per ping to measure velocity. The lack of coding in the pulse makes a narrowband measurement much less precise, but it allows profiling over a longer range. Narrowband processing generally requires much larger ensembles to get a precise measurement.

------ O ------

Ocean Observer: Low frequency Phased Array ADCP for cabled deployment, usually from an oilrig.

Ocean Surveyor: Low frequency Phased Array ADCP for vessel-mounted operations.

------ P ------

Percent Good: A key quality control parameter, percent good indicates what fraction of the pings passed the various error thresholds. Each depth cell reports four values for percent good, and the meaning depends on the coordinate frame. If data is collected in beam coordinates, then the four percent good values represent the percentage of the pings collected by each beam for that depth cell whose correlation exceeded a low correlation threshold. In the other coordinate frames (ADCP, Ship and Earth Coordinates), the four Percent Good values represent (in order): 1) The percentage of good three beam solutions (one beam rejected); 2) The percentage of good transformations (error velocity threshold not exceeded); 3) The percentage of measurements where more than one beam was bad; and 4) The percentage of measurements with four beam solutions.

Phase: An engineering measure of the propagation delay caused by radial motion between scatterer and source. Phase is ambiguous in that it is cyclical (e.g. 10 º is the same phase as 370 º).

Phased Array Transducer: A single, flat, multi-element transducer that uses an RDI proprietary technique to simultaneously form all four beams. Available phased array transducers are generally low frequency (38 kHz, 75 kHz and 150 kHz) long range devices.

Ping: The entirety of the sound generated by an ADCP transducer for a single measurement cycle. A broadband ping contains a coded series of pulses and lags, while a narrowband ping contains a single pulse.

Ping Mode: Power conserving mode for a deployed ADCP or DVL, where only the power needed for the immediate deployment task is drawn (as opposed to command mode, where the ADCP consumes considerable power while simply waiting for input). This mode saves the deployment configuration so that, in the event of a power interruption, the ADCP or DVL will be able to automatically resume the configured deployment upon return of power.

PlanADCP: Windows-based software package allowing the user to configure, and evaluate the consequences of, a deployment command-set for an ADCP.

Profile: A series of regularly spaced depth cells in which the ADCP measures velocity along with several quality control parameters.

Pulse: A sound wave generated by a transducer.

Propagation Delay: The change in the travel time of sound between a source and scatterer, generally due to radial motion. As an example: if it takes longer for sound to reflect back from a scatterer than it did a short while ago (and the speed of sound has not changed), then the scatterer must be getting farther away.

------ Q ------

Quartermaster: The model name for a self-contained 150kHz Workhorse ADCP.

------ R ------

Radial Motion: Movement, which alters the distance between source and scatterer.

Range: The maximum profile length of an ADCP, it depends on several factors (note that these factors are inter-related in a complex way, and the generalizations below are intended only as rules of thumb – use PlanADCP to check specific combinations):

1. Frequency: the lower the frequency, the longer the range.
2. Depth cell size: the larger the cell, the longer the range.
3. Mode of operation: mode 1 has the longest range.
4. Bandwidth: the narrower the bandwidth, the longer the range.
5. Concentration of scatterers: generally, the more scatterers, the longer the range.

6. Temperature: generally, the colder the water, the longer the range.
7. Salinity: generally, the fresher the water, the longer the range.

Range Gating: After sending a ping into the water, the ADCP transducers listen for returned signal. The time series of the returned signal is then broken into a sequence of time segments, or range gates. Each segment is equivalent to a depth cell, with the last segment coming from the farthest range from the ADCP.

RDI Tools: Software package containing all of the BB* programs (*BBTalk*, *BBList*, etc.) as well as several commonly used decoder files.

Reference Layer: In moving platform applications where the bottom is out of range, the vessel motion can be approximated by assuming the water is motionless at some point in the measured profile. This point is the reference layer.

Remotely Operated Vehicle (ROV): unmanned submersible controlled by an operator via a tethering cable.

Ringing: After transmission the ADCP electronics, transducer and immediate surrounding equipment (particularly in vessel mounted ADCPs) all require some finite time to dampen the transmit energy, during which time any signal return from scatterers will be contaminated.

Rio Grande ADCP: The model name for an ADCP optimally configured for measurement of river discharge. A distinguishing feature of Rio Grande ADCPs is that they are designed to operate from a 12 VDC power supply (all other ADCPs operate from 20 – 60 VDC).

Rosette: Oceanographic instrumentation package found on most research vessels. Rosettes are designed to be lowered to depths of interest while collecting data of various types. Most Lowered-ADCPs are mounted on rosettes.

ROV: Remotely Operated Vehicle

------ *S* ------

Scatterers: Small particles or plankton in the water which reflect sound waves.

Sea Chest: Cavity in the hull of a vessel to allow stream-lined, recessed mounting of equipment such as a Vessel Mount ADCP.

Sediview: Third party software designed to use ADCP echo intensity measurements and *in situ* sampling to obtain quantitative estimates of sediment concentration.

Self-Contained ADCP: An ADCP equipped with internal batteries and an internal recorder for autonomous operation.

Sentinel: The model name for a self-contained Workhorse ADCP.

Ship Coordinates: Profile data is reported in an orthogonal coordinate frame as referenced to the ship (if beam 3 is forward then ship coordinates are the same as instrument coordinates).

Shiptrack: DOS program to integrate and display Navigator data.

Sidelobes: Peaks in sound intensity generated by a transducer found to the side of the main lobe.

Sidelobe Contamination: This only need be considered when operating an ADCP near a boundary (e.g. in shallow water). The beam angle of the main lobe of an ADCP transducer is 20 or 30º off the vertical, which means that the distance to the boundary along the ADCP centerline is shorter than the distance to the boundary along a beam. Because most boundaries will reflect very strongly (much more strongly than the scatterers), sidelobe energy can travel the shorter path directly to the surface and thereby include the "velocity" of the boundary with the velocity measurements taken along the beams at any longer distance. This potential for interference depends strictly on the beam angle. An ADCP with a 20º beam angle has the potential for sidelobe contamination at (distance to the boundary)*cos(20º), or equivalently, the last 6% of the profile. Note: Sidelobe contamination is not relevant for DVLs, which specifically look for the bottom.

Software Break: When using radio or acoustic telemetry, it is usually not possible to send a break signal. Under these circumstances an ADCP can be configured to recognize a series of keystrokes (i.e. = = =) as a break.

Source: Originator of sound of known frequency, here typically the transducer of an ADCP.

StreamPro: Model name for ADCP designed for discharge measurement in shallow waterways.

------ T ------

Top Discharge: When using an ADCP to measure river discharge, it is not possible to measure all the way to the surface (due to the blank zone and to the need to mount the transducers at sufficient depth to remain submerged with no air entraining past the transducers). In order to get an accurate approximation of the total discharge, the flow in this area must be estimated and included, usually by extrapolating the measured velocities to the surface.

Transducer: A device to convert electrical energy into sound waves, and vice versa.

------ U ------

Unmanned Underwater Vehicle (UUV): Generic term referring to both AUVs and ROVs.

UUV: Unmanned Underwater Vehicle

------ V ------

Vessel Mount: An ADCP mounted to the hull of a vessel, typically in a sea chest, and having inputs from the vessel's navigation equipment.

VM-DAS: Windows-based data acquisition package for vessel mount ADCPs. This package includes the ability to incorporate the ship's navigation equipment.

------ W ------

Wavelength: The distance between successive wave crests in a sound wave.

WinADCP: Windows-based post-processing package for ADCP data.

WinH-ADCP: Windows-based data acquisition and playback package for Horizontal ADCPs.

WinRiver: Windows-based software package for real time ADCP data gathering. It is designed primarily for measurement of river discharge and allows integration of the platform's navigation equipment. It also converts echo intensity measurements to qualitative estimates of backscatter.

WinSC: Windows-based software package for self-contained ADCPs includes configuring, testing, data recovery and viewing options.

Workhorse ADCP: The generic model name for all of the non-phased array broadband ADCPs currently produced by RDI.

------ X ------

Xdcr: A common abbreviation for transducer.

------ Y ------

------ Z ------

ZedHed: RDI trade name for a transducer designed to minimize ringing.

NOTES