REVISION HISTORY			
REV.	DESCRIPTION	DATE	APPROVED
	INITIAL RELEASE	APR 17, 2006	
A	ADD ETHERNET AND POWER CONNECTIONS	APR 26, 2006	
B	ADD DRY SIDE HA7 and S14	SEP 27, 2006	

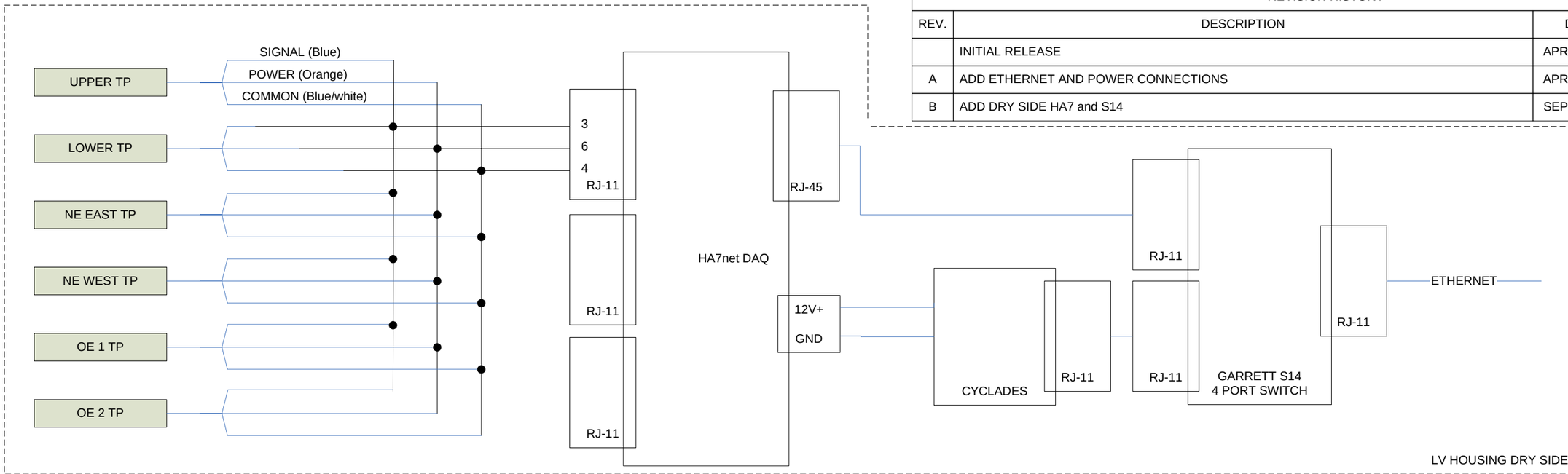

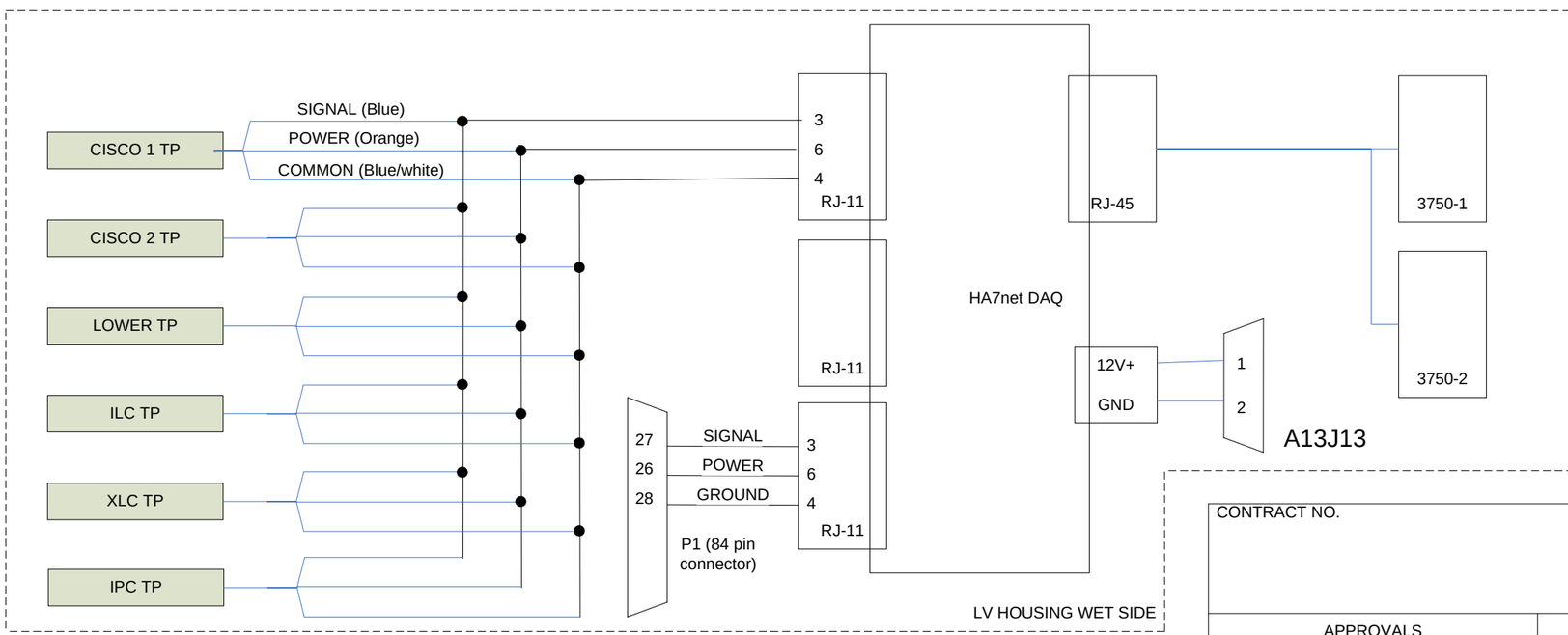

NOTES:
1) TP = temperature probe
2) Move existing Cyclades Ethernet connection to Garrett S14.
3) Build HA7 TP wire harness as a linear/stubbed string with minimum stub length to TP (see Dallas-Maxim app note 148).
4) Use FC-77 compatible wire for pigtails on wet side (Mohawk cable is OK).

CONTRACT NO.

MARS

Monterey Accelerated Research System
Monterey Bay Aquarium Research Institute
7700 Sandholdt Road
Moss Landing, CA 95039

APPROVALS		DATE
DRAWN	GENE M.	17APR06
CHECKED		
ENGR		
DESIGN ACTIVITY	SYSTEM ENGR	

TITLE **LV/COMMS 1 WIRE DAQ SCHEMATIC**

SIZE	CAGE CODE	DWG. NO.	REV.
B		1003135	B

SCALE | FILE | SHEET 1 OF 1