RTC distribution and arbitration
(build up only on clock boards)

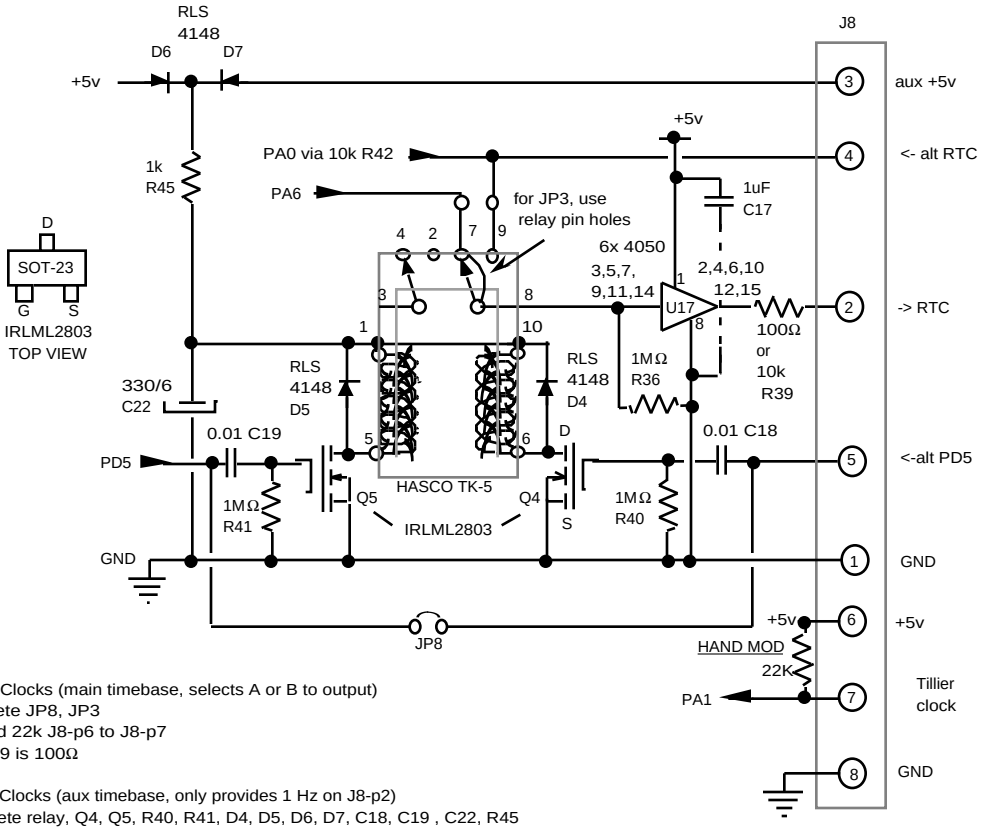

#CxxA Clocks (main timebase, selects A or B to output)
- •delete JP8, JP3
- •add 22k J8-p6 to J8-p7
- •R39 is 100Ω

#CxxB Clocks (aux timebase, only provides 1 Hz on J8-p2)
- •delete relay, Q4, Q5, R40, R41, D4, D5, D6, D7, C18, C19 , C22, R45
- •add JP8, JP3
- •jump J8-p3 to J8-p6
- •add 22k J8-p6 to J8-p7
- •R39 is 10k

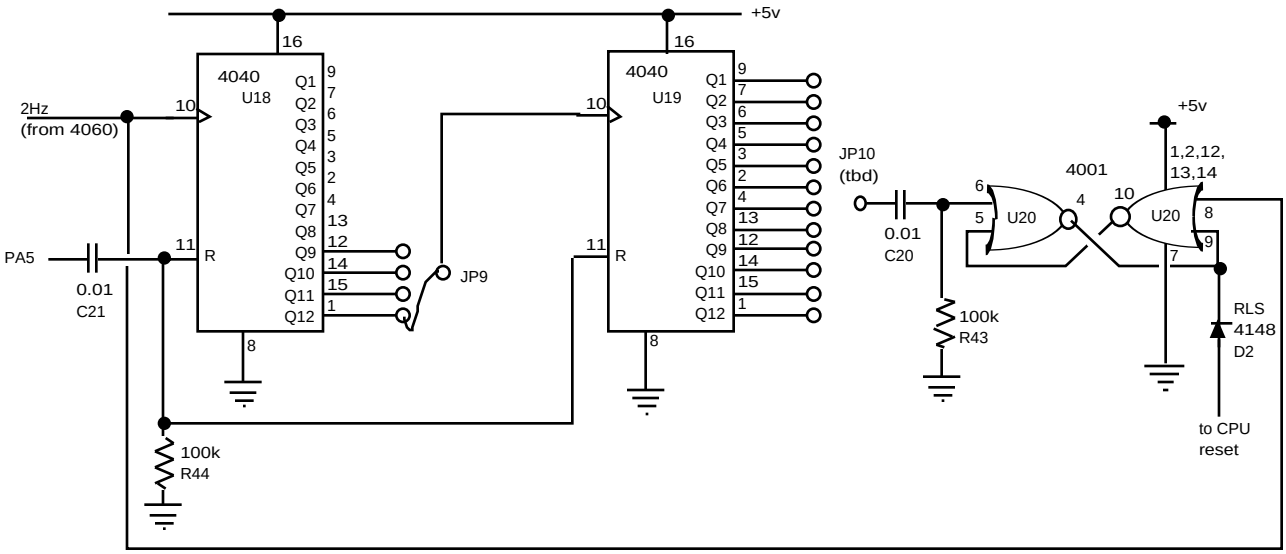

Note: shearable 0.5" section on Overlord rev. 3.0 board

Neptune CPU-Accessories		proj 879720.00
A. Bradley	IV-27-2004	rev II-23-2005