NOTES:
1. DO NOT SCALE FROM DRAWING.
2. FOR BULKHEAD PENETRATOR OUTLINE/INTERFACE DIMENSIONS SEE DRAWING 60045 (OPM-208-03).
3. FOR FLYING HI-POWER ROV RECEPTACLE OUTLINE/INTERFACE DIMENSIONS SEE DRAWING 33325 (ROV-328-03).
4. FOR HOSE INTERFACE AND SPECIFICATIONS SEE D/N 19421 (ODN-130-24).
5. DELETED
6. APPROX WEIGHT IN AIR: TBD
APPROX WEIGHT IN WATER: TBD
7. DOUBLE QUANTITY BOOTS REQUIRED FOR MOLDING PURPOSES.
8. DIMENSIONS IN [ ] ARE MILLIMETERS.

REVISION	DESCRIPTION	DATE	APPROVED
A	CO 7248 INITIAL ISSUE	6-24-04	HEP
B	CO 8296	7-9-04	HEP
C	CO 8563	8-25-04	JMT
D	CO 8609	9-9-04	HEP

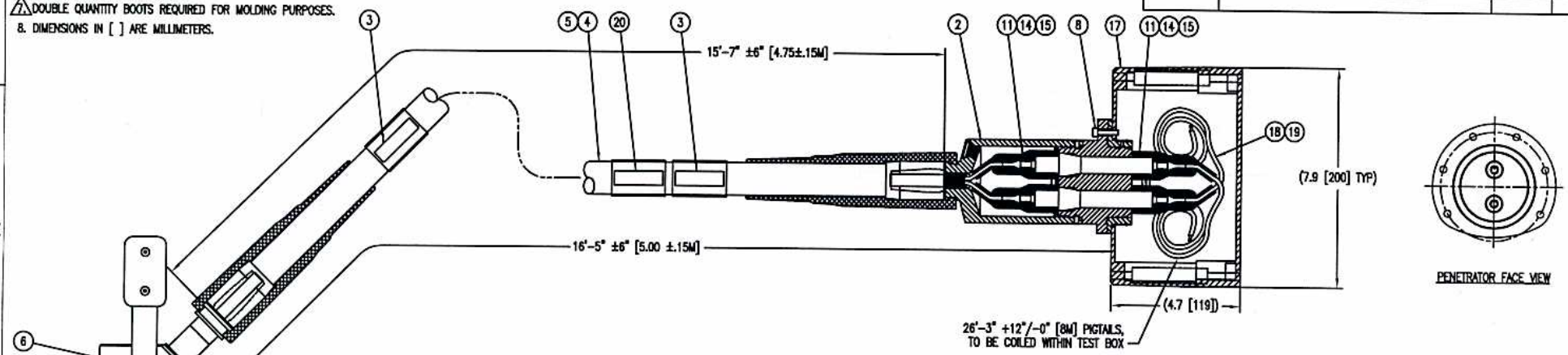

PENETRATOR FACE VIEW

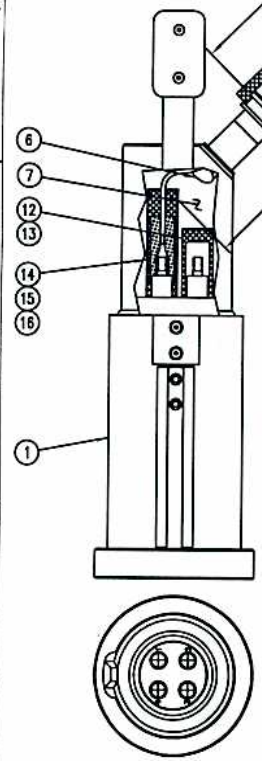

ITEM	PART #	REF #	DESCRIPTION	MATERIAL	QTY
20	1013374	P-TOUCH-1/2"	LABEL "CUSTOMER P/N ____"	B.O.F.	1
19	1034781	178-8316-7	REYNOLDS HI-VOLTAGE WIRE, 20 AWG, 22 KVDC, WHITE	B.O.F.	2 X A/R
18	1034774	178-8316-1	REYNOLDS HI-VOLTAGE WIRE, 20 AWG, 22 KVDC, RED	B.O.F.	2 X A/R
17	1034789	FHT-056-04-5	NEWARK ENCLOSURE	ALUMINUM	1
16	1033967	OPT-037-04-5	BOOT SEAL	OD1037 RUBBER	4 △1
15	1019209	SCOTCHCAST 2130	POTTING COMPOUND, 7.6 oz.	B.O.F.	3
14	1033966	HPR-044-04-6	CONDUCTOR TIP	GOLD-PLATED COPPER	6
13	1032733	HPR-051-04	RETAINER CAP	DELRIN	2
12	1032734	HPR-052-04	BOOT CAP	OD1037 RUBBER	2
11	1033242	HPR-075-04	BOOT SEAL	OD1037 RUBBER	8 △1
10	DELETED				
9					
8	1000210	10-32 UNF X 3/4	SOCKET HEAD CAP SCREW	316 STAINLESS STEEL	3
7	1004367	DC200-100cS	DOW CORNING OIL	SILICONE OIL	A/R
6	1003196	CCPT3X	1/2" PET EXPANDABLE TUBING	B.O.F.	2 X A/R
5	1012533	ODN-109-01-2	TITI, -12 HOSE ASSEMBLY	VARIOUS	1
4	1012416	ODHOSE-12-HBD-2	-12 HYDRAULIC HOSE	B.O.F.	1 X A/R
3	1013374	P-TOUCH-1/2"	LABEL "ODI S/N ____"	B.O.F.	2
2	1035361	HPR-069-01-3	HI-POWER BULKHEAD PENETRATOR	VARIOUS (TITANIUM SHELL)	1
1	1033931	HPR-077-01	HI-POWER FLYING ROV RECEPTACLE	VARIOUS (TITANIUM SHELL)	1

PARTS LIST

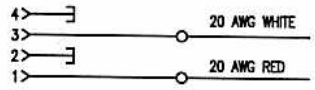

WIRING DIAGRAM

ALL DATA AND INFORMATION CONTAINED OR DISCLOSED BY THIS DOCUMENT IS CONFIDENTIAL AND PROPRIETARY INFORMATION OF OCEAN DESIGN, INC. AND ALL RIGHTS THEREIN ARE EXPRESSLY RESERVED. BY ACCEPTING THIS MATERIAL, THE RECIPIENT AGREES THAT THE MATERIAL AND THE INFORMATION CONTAINED THEREIN IS HELD IN CONFIDENCE AND IN TRUST AND WILL NOT BE USED, COPIED, REPRODUCED IN WHOLE OR IN PART, NOR ITS CONTENTS REVEALED IN ANY MANNER TO OTHERS, EXCEPT TO MEET THE SPECIFIC PURPOSE FOR WHICH IT WAS DELIVERED.

UNLESS OTHERWISE SPECIFIED DIMENSIONS ARE IN INCHES. TOLERANCES ARE:
ANGLES ± 1/2°
FRACTIONS ± 1/64
DECIMALS ± .X = .03, ± .XX = .01, ± .XXX = .003
CONCENTRICITY .004 TIR
SURFACE FINISH 63
BREAK ALL UNNAMED CORNERS & EDGES INTERNAL CORNERS R.06 MAX
THIRD ANGLE PROJECTION

ODI Advanced Technology Systems
OCEAN DESIGN, INC.
WWW.OCEANDESIGNINC.COM

APPROVALS	DATE
DRAWN TAS	
CHECKED MF	
ENGR PFC	
DESIGN	

HI-POWER PENETRATOR TO
HI-POWER FLYING ROV RECEPTACLE
GA DRAWING W/ PARTS LIST

SIZE	CAGE CODE	DOC. NO.	REV
B	OVV88	59002	D

SCALE HALF | PART NO. 1033239 | REF. NO. OPM-194-01 | SHEET 1 OF 1