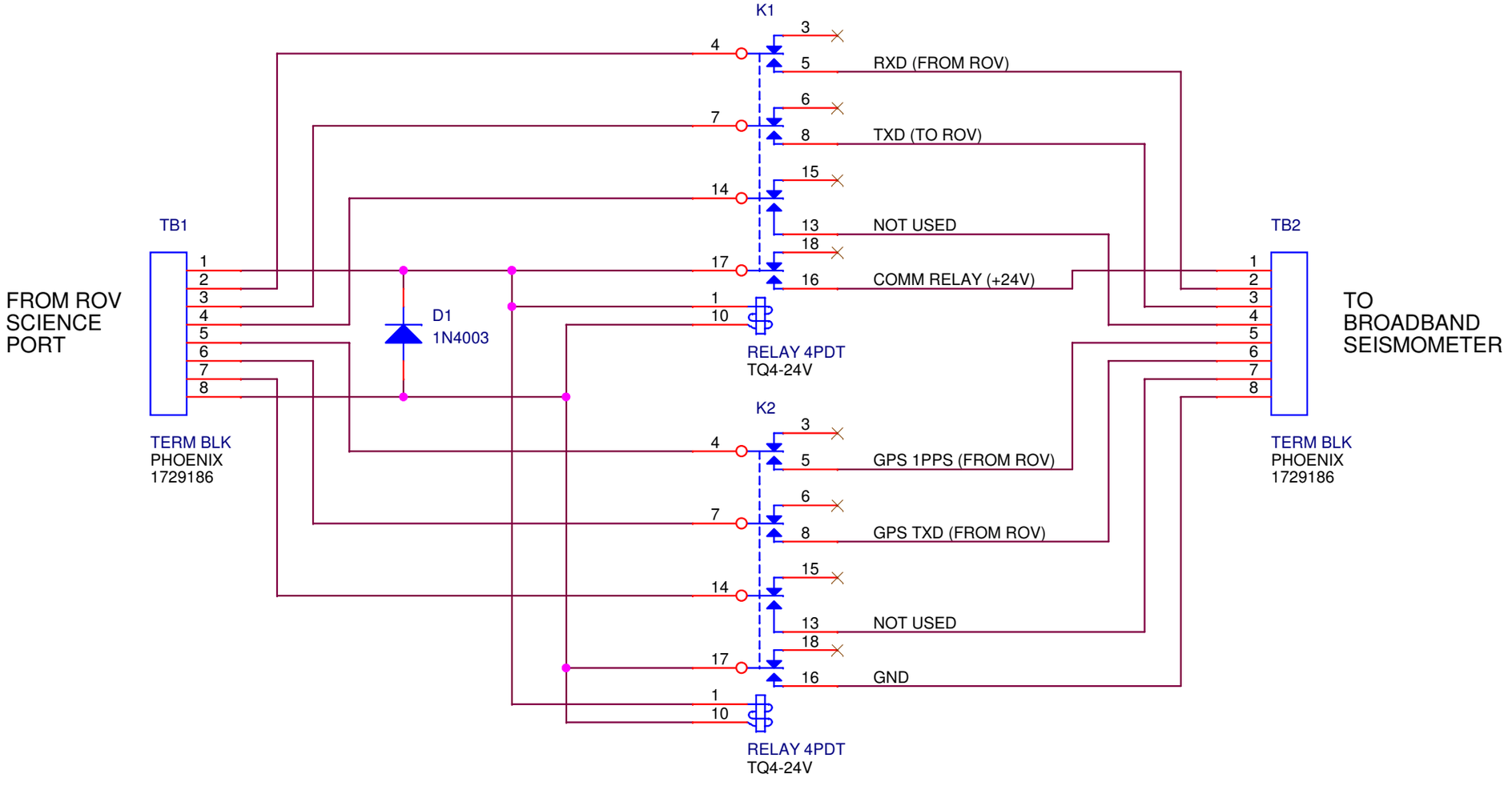

NOTE: THIS BOARD ISOLATES THE NAUTILUS CONNECTOR, EXPOSED TO SEAWATER, FROM ANY STRAY VOLTAGES IN THE ROV THAT WOULD DAMAGE THE NAUTILUS PINS

Engineer: McGill		
Title: Keck Broadband Seismometer: Relay Isolation Board		
Size: A	Document Number: <Doc>	Rev: 1.0.1
Date: Monday, April 02, 2012	Sheet 7 of 10	