THE INFORMATION CONTAINED IN THIS DRAWING IS THE SOLE PROPERTY OF MBARI ANY REPRODUCTION IN PART OR WHOLE WITHOUT THE WRITTEN PERMISSION OF MBARI IS PROHIBITED.

REVISIONS			
REV.	DESCRIPTION	DATE	APPROVED
	INITIAL RELEASE	XX/XX/03	J.E.

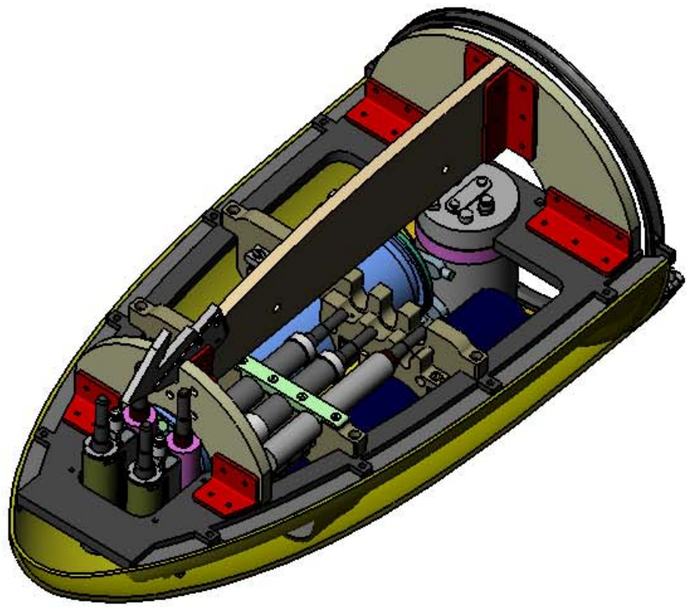

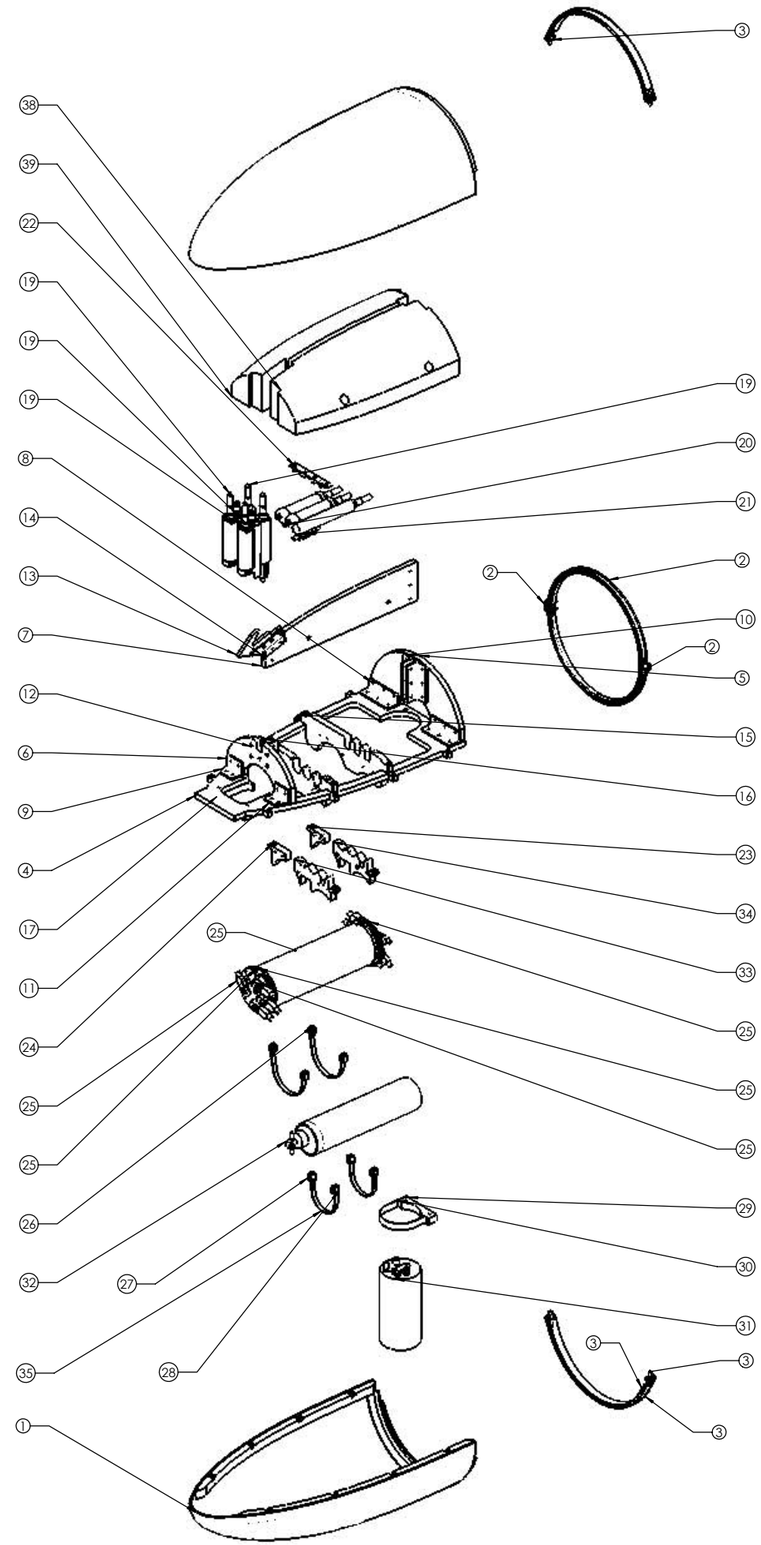

ITEM NO.	QTY.	Part_Number	DESCRIPTION	VENDOR	MATERIAL	Comments
39	1		Nose Section FoamPack Sfbd		TG-24	
38	1		Nose Section FoamPack Port		TG_24	
37	1		Flat Washer		316 S.S.	
36	2		SocHd Cap Screw		316 S.S.	
35	2		ISUS Webbing			
34	1	100XXX	ISUS Mount Fwd/Aft-Left/Right		ABS	
33	1	100XXX	ISUS Mount Fwd/Aft-Left/Right		ABS	
32	1	FFFFFFFFFF	ISUS 1000m			
31	1	HS2	HydroScat 2			
30	1		HS2 Deep Mount			
29	1		HS# Retaining Strap			
28	4	100XXX	Webbing Clamp Thru/Tapped		ABS	
27	4	100XXX	Webbing Clamp Thru/Tapped		ABS	
26	2		Dcon Webbing			
	10		LPBH Washer			
	10		LPBH Nut			
	1		MINI-BCR Nut			
	1		MINI-BCR Washer			
	1	MINI-BCR-L	MINI Bulkhead Conn.			
	1	LPBH-9	Impulse LPBH mated			
	4	LPBH-5	Impulse LPBH mated			
	5	LPBH-7	Impulse LPBH mated			
	1		Prevco Case End Cap			
	1		Prevco Case End Cap			
	1		Prevco Case Body			
25	1		Prevco Housing			
24	1	100XXX	DCon Mount Fwd/Aft-Left/Right		ABS	
23	1	100XXX	DCon Mount Fwd/Aft-Left/Right		ABS	
22	1	100XXX	Pump_Dry Clamp		ABS	
21	1	SBE43	Dissolved Oxygen Sensor			
20	2	SBI 5T	Seabird Pump			
	1	SBE 3F	CTD Temp Sensor			
	1		Cond.Snsr.Tube Bracket			
	1		Cond.Sensor MnlPtf			
	1		Cond.Sensor Tube			
	1		Thermistor Zinc			
	1	SBE 4C	CTD Conductivity Sensor			
	1		Cond.Cell.Guard			
19	2		Seabird CTD Assembly			
18	1	100XXX	CTD SensorMount Port		UHMW P.E+	
17	1	100XXX	CTD SensorMount		UHMW P.E.	
16	1	100XXX	Instrument Mount Fwd		ABS	
15	1	100XXX	Instrument Mount Aft		ABS	
14	2	FFFFFFFFFF	Tow Hook Interface Plate		UNK	
13	1	FFFFFFFFF	Tow Hook		Unk	
12	2	101704	Strongback Support Fwd		GPO3 Fiberglass	
11	1	101702	Fwd Bulkhead Support Port		GPO3 Fiberglass	
10	2	101705	Strongback Support Aft		GPO3 Fiberglass	
9	1	101701	Fwd Bulkhead Supoport Sfbd		GPO3 Fiberglass	
8	2	101703	Aft Bulkhead Support		GpO3 Fiberglass	
7	1	101709	Strong Back'		UHMW P.E.	
6	1	101708	Bulkhead Forward		UHMW P.E.	
5	1	101707	Bulkhead Aft		UHMW P.E.	
4	1	101710	Rail Interface		UHMW P+E.	
	2		T-Bolt			
	1		Clamp Band			
	1		Clamp Profile			
3	2	99885-2065 MO1	Rim Clamp band			
	1		Flat Tab - Rim			
	1		Rim Tab			
	1		Rim			
2	1		Joining Ring Set			
	1		RING INSERT SHELL			
	1		FLANGE NOSE Top Port			
	1		Flange Nose Top Sfbd			
	1		Shell Nose Base Part		ABS	
	1		MBARI Top Nose Shell			
	1		RING INSERT SHELL			
	1		Flange Nose Bottom Port			
	1		FLANGE NOSE BOTTOM STBD			
	1		Shell Nose Base Part		ABS	
	1		MBARI Bottom Nose Shell			
1	1		Nose Assembly			

NOTES: (CONT. FROM TITLE BLOCK)

BILL OF MATERIALS					
Shop / Q.C.		UNLESS OTHERWISE SPECIFIED TOLERANCES ARE:	APPROVALS DATE	Monterey Bay Aquarium Research Institute	
Inspector		1PLACE DIM ±.010 / 2PLACE DIM ±.005 / 3PLACE DIM ±.005 / ANGLES ±1°	DRAWN J. ERICKSON X/XX/01	MBARI 7700 Sandholdt RD. Moss Landing, CA 95039 PH: (831) 775-1700	
Shop Foreman		1. DIMENSIONS ARE IN INCHES 2. DIMENSION LIMITS HELD AFTER PLATING. 3. REMOVE BURRS AND SHARP EDGES .015 MAX 4. MACHINED FILLET RADII .010-.030. 5. MACHINED DIAMETERS ON A COMMON CENTERLINE CONCENTRIC WITHIN .005 6. PERPENDICULARITY & PARALLELISM OF MACHINED SURFACES .002 PER INCH MAX .012 INCHES FOR SINGLE SURFACE.	ENGINEER J. ERICKSON X/XX/01		
Engineer			CHECKED	PROJECT NAME CTDNoseSection_Rev8	
NEXT ASS'T Description	NEXT ASS'T Number		PROJECT NO. XXXXXX		
			PROJECT ZZZZZZZZ	SIZE D / DWG. NO. 100XXXDWG	REV.
APPLICATION		DO NOT SCALE DRAWING	WEIGHT LB.	SCALE / CAD FILE: MECH ENG ON TORNADO	SHEET 1 OF 1