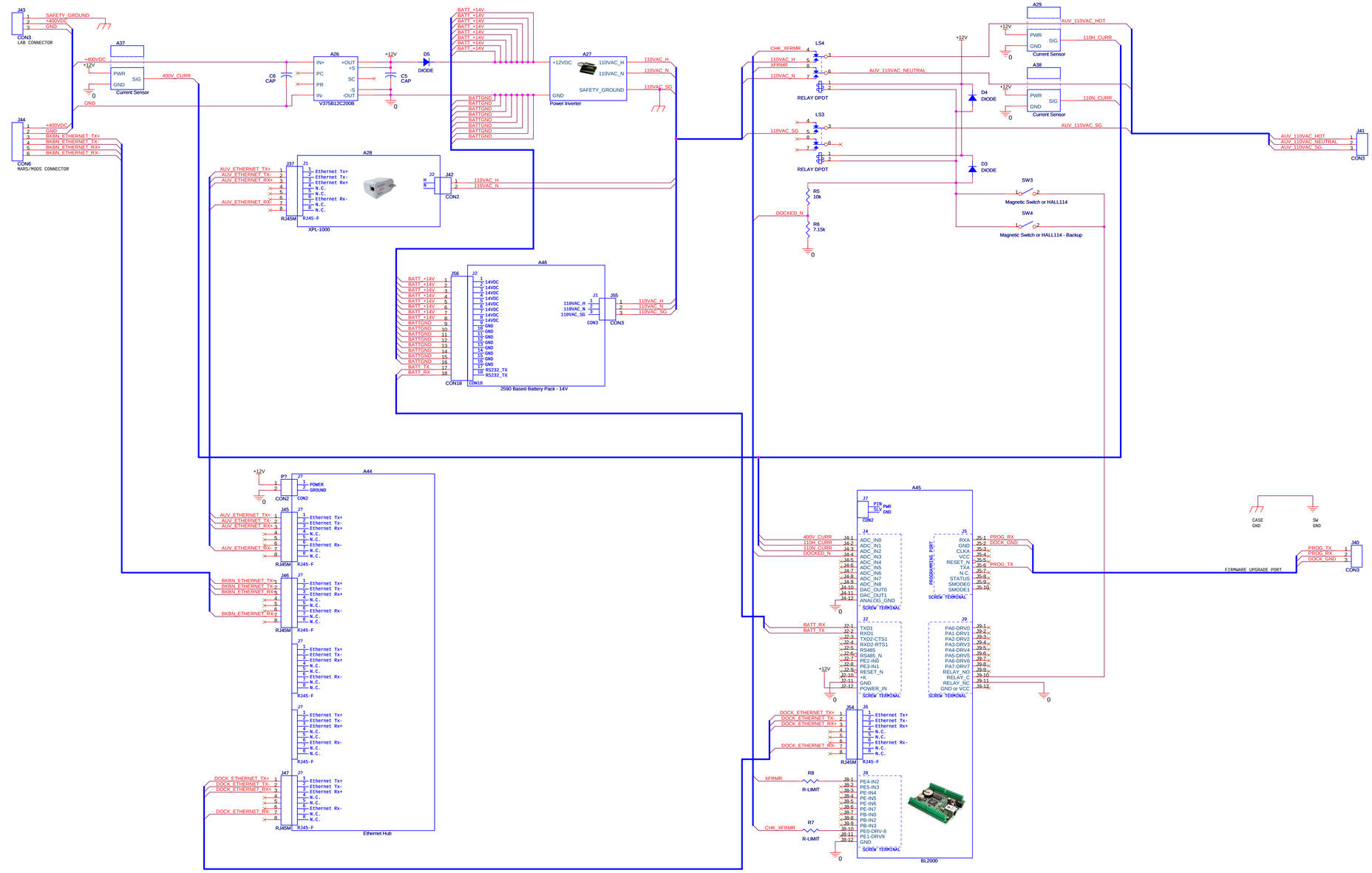

Copyright © 2005 MBARI

All information herein is considered proprietary and may not be copied, duplicated, or transmitted without the express permission of Monterey Bay Aquarium Research Institute.

Rev.	Date	Description
A	01/24/2005	Initial Release

Monterey Bay Aquarium Research Institute
7700 Sandholdt Rd., Moss Landing, CA 95039-9644

Designed by: Lance McBride

Title: AUV Dock Concept With Internal Monitoring and Battery Pack

Size: D | Document Number: <Doc> | Rev: A

Date: Monday, January 24, 2005 | Sheet 1 of 1