THE INFORMATION CONTAINED IN THIS DRAWING IS THE SOLE PROPERTY OF MBARI. ANY REPRODUCTION IN PART OR WHOLE WITHOUT THE WRITTEN PERMISSION OF MBARI IS PROHIBITED.

REVISIONS			
REV.	DESCRIPTION	DATE	APPROVED
	INITIAL RELEASE		

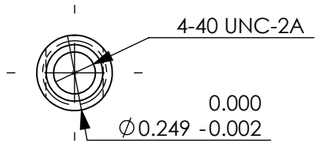

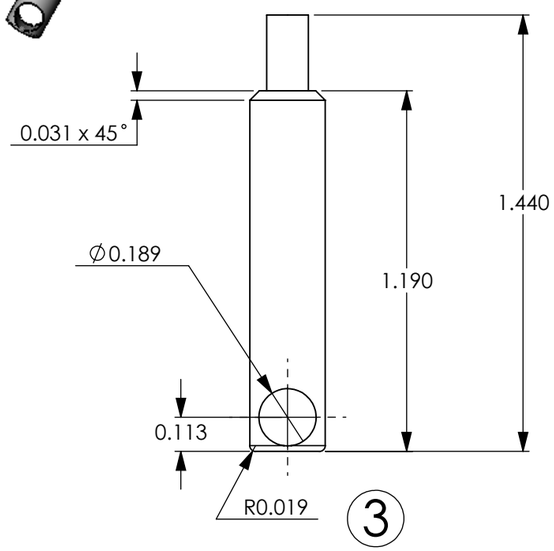

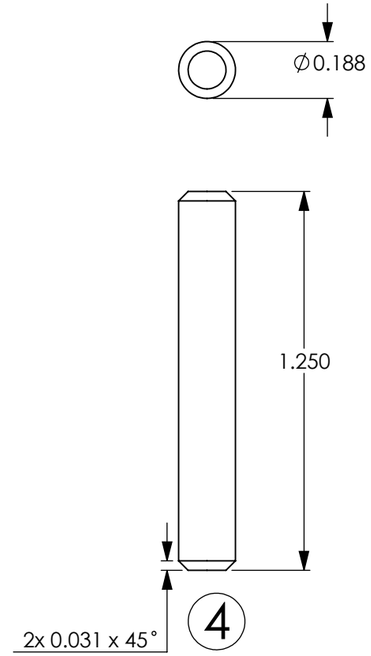

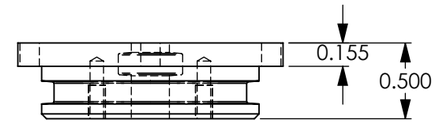

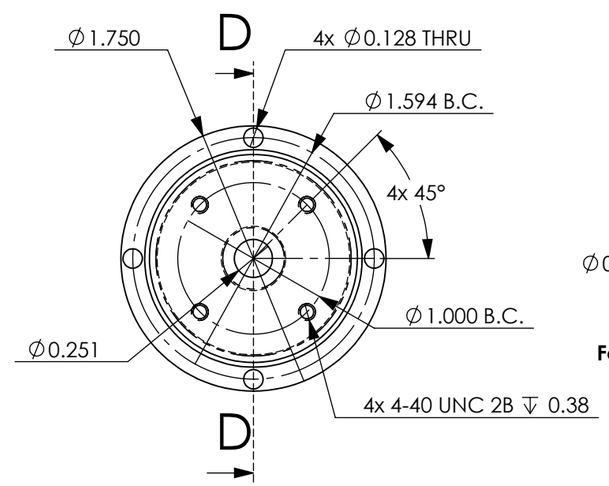

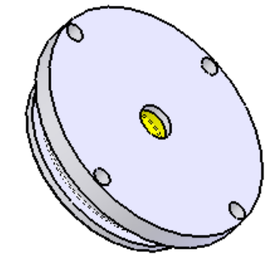

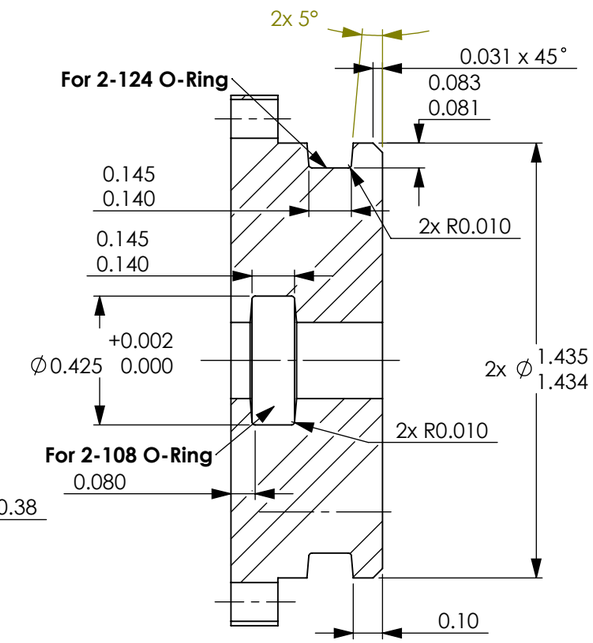

SECTION D-D
SCALE 2 : 1

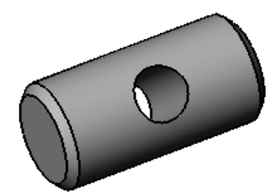

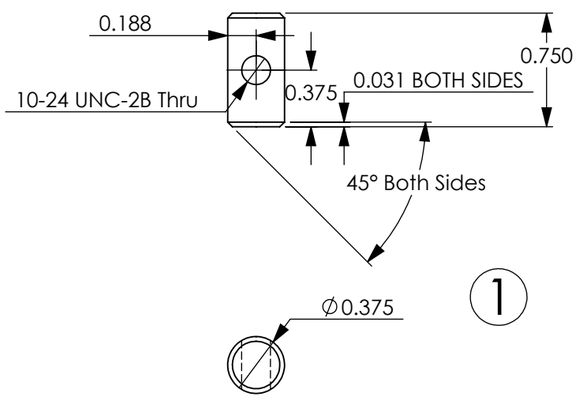

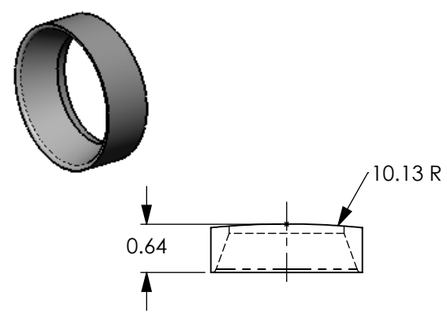

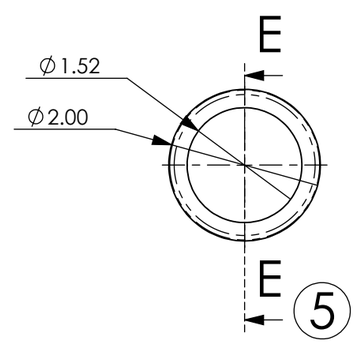

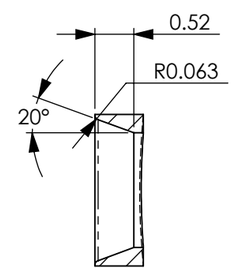

SECTION E-E
SCALE 1 : 2

ITEM NO.	QTY	PART NO.	DESCRIPTION	MATERIAL SPECIFICATION
5	10 Ea.		Spacer, Sampler Hull Alignment	ABS
4	10 Ea.		Shaft Extension Handle	316 St. Stl
3	10 Ea.		Latch Actuator Pin	316 St. Stl
2	10 Ea.		P25 Housing Cap	ACRYLIC
1	16 Ea.		Barrel Nut	316 St. Stl

BILL OF MATERIALS

UNLESS OTHERWISE SPECIFIED TOLERANCES ARE:

1 PLACE DIM	2 PLACE DIM	3 PLACE DIM	ANGLES
±1/16	±.02	±.005	±1°

1. DIMENSIONS ARE IN INCHES
2. DIMENSION LIMITS HELD AFTER PLATING.
3. REMOVE BURRS AND SHARP EDGES .015 MAX.
4. MACHINED FILLET RADII .0150-.030.
5. MACHINED DIAMETERS ON A COMMON CENTERLINE CONCENTRIC WITHIN .OO5
6. PERPENDICULARITY & PARALLELISM OF MACHINED SURFACES .002 PER INCH. MAX .012 INCHES FOR SINGLE SURFACE.

APPROVALS		DATE
DRAWN	F. Shane	05Sep06
ENGINEER	F. Shane	05Sep06
CHECKED		
PROJECT NO.	900402	
PROJECT	AUV GULPER	
WEIGHT		

Monterey Bay Aquarium Research Institute
7700 Sandholdt RD.
Moss Landing, CA 95039
PH: (408) 775-1700

AUV GULPER
ACTUATOR COMPONENTS

SIZE	DWG. NO.	REV.
B	1003241.DWG	

SCALE NONE | CAD FILE: Project Library/AUV GULPER | SHEET 1 OF 1

NEXT ASSY	USED ON
APPLICATION	

DO NOT SCALE DRAWING