COTS/IMC #	ITEM NO.	QTY.	DESCRIPTION	SPECIFICATION/ PART #/MRN	MANUFACTURER/ NSCM
	1	1	CONTROL CONSOLE STAND	039A001A	BOT
	2	2	CONTROL CONSOLE WELD DOWN ANGLE	039A002	BOT
	3	4	1/2–13UNC HEX NUT	S.S.	
	4	8	1/2" DIA FLAT WASHER; NARROW SERIES	S.S.	
	5	4	1/2" DIA LOCK WASHER	S.S.	
	6	4	1/2–13UNC x 1–1/2" LG HEX HD BOLT	S.S.	

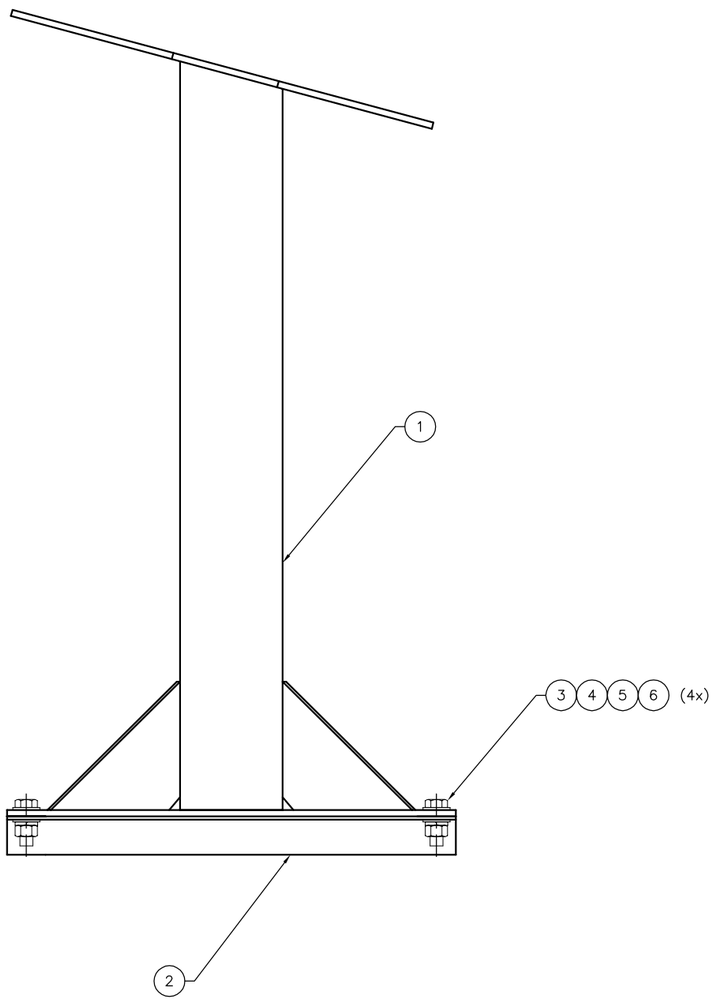

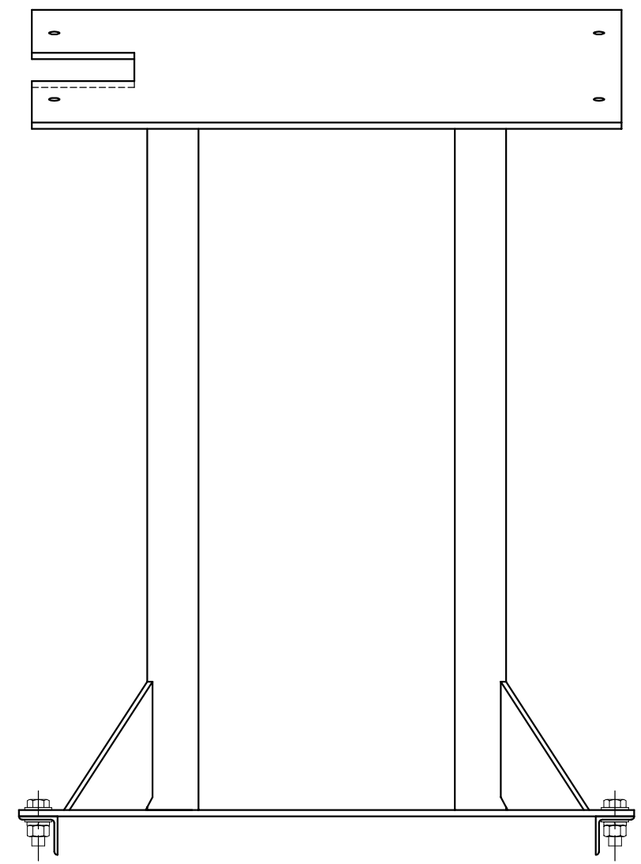

REV.	DATE	REMARKS
A	JAN. 30/02	INSERT NOTCH AS PER ECO# 0739
	FEB. 02/01	PRODUCTION ISSUE

REVISIONS

NSCM

UNLESS OTHERWISE NOTED
1. DIMENSIONS IN INCHES
2. X.X ± 0.025"
3. X.XX ± 0.010"
4. X.XXX ± 0.003"
5. FRACTIONS ± 1/32"
6. ANGLES ± 1/2°
7. ECCENTRICITY .003 MAX
8. FLATNESS 0.003" T.I.R.
9. SURFACE FINISH 125/
10. BREAK EDGES

THIRD ANGLE

BROOKE OCEAN TECHNOLOGY LTD.
50 THORNHILL DRIVE, UNIT 11
DARTMOUTH, NOVA SCOTIA
CANADA B3B 1S1
TEL: (902) 468–2928 FAX: (902) 468–1388

DESIGNED JGD
DRAWN BB
CHECKED PB
APPROVED GL
QA

BOT Quality Inspected 1E

PROJECT
RACAL AUV LRS

TITLE
CONTROL CONSOLE STAND ASSEMBLY

B
PROJECT NO. 0039
DRAWING NO. 039–A–0–00
REVISION A
SCALE 1:6
DATE FEB. 02/01
SHEET 1 OF 1

THE INFORMATION CONTAINED IN THIS DOCUMENT IS CONFIDENTIAL AND SHALL NOT BE MADE PUBLIC, OR COPIED, OR USED AS THE BASIS FOR THE MANUFACTURE OR SALE OF ITEMS UNLESS SPECIFICALLY AUTHORIZED IN WRITING BY BOT. THIS DOCUMENT IS THE PROPERTY OF BOT AND IS SUBJECT TO RETURN ON DEMAND.