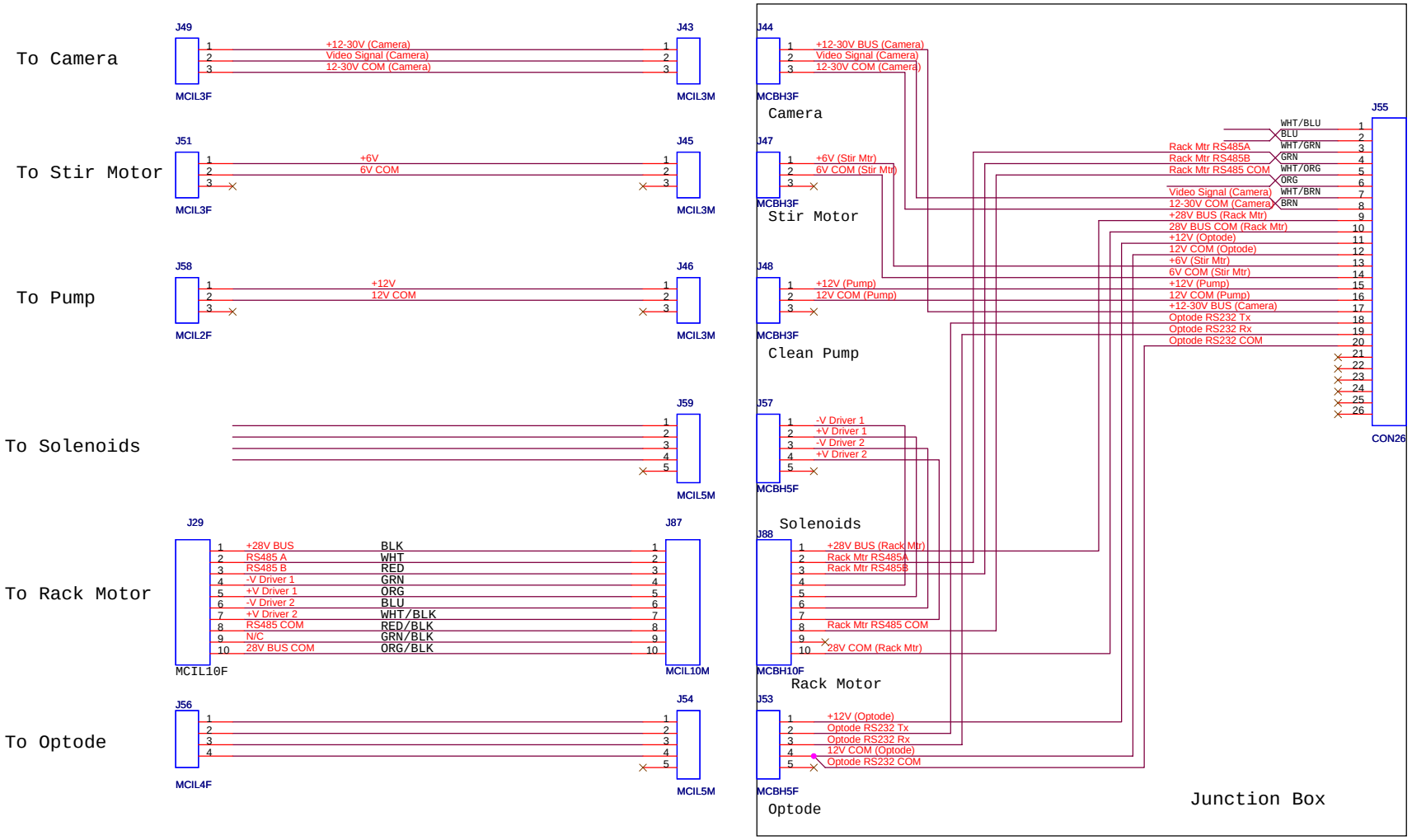

Engineer: Alana Sherman, x1780

Title	Benthic Rover : Respirometer Junction Box	
Size B	Document Number 1003148	Rev 1.0.0
Date: Tuesday, October 10, 2006	Sheet 1 of 1	