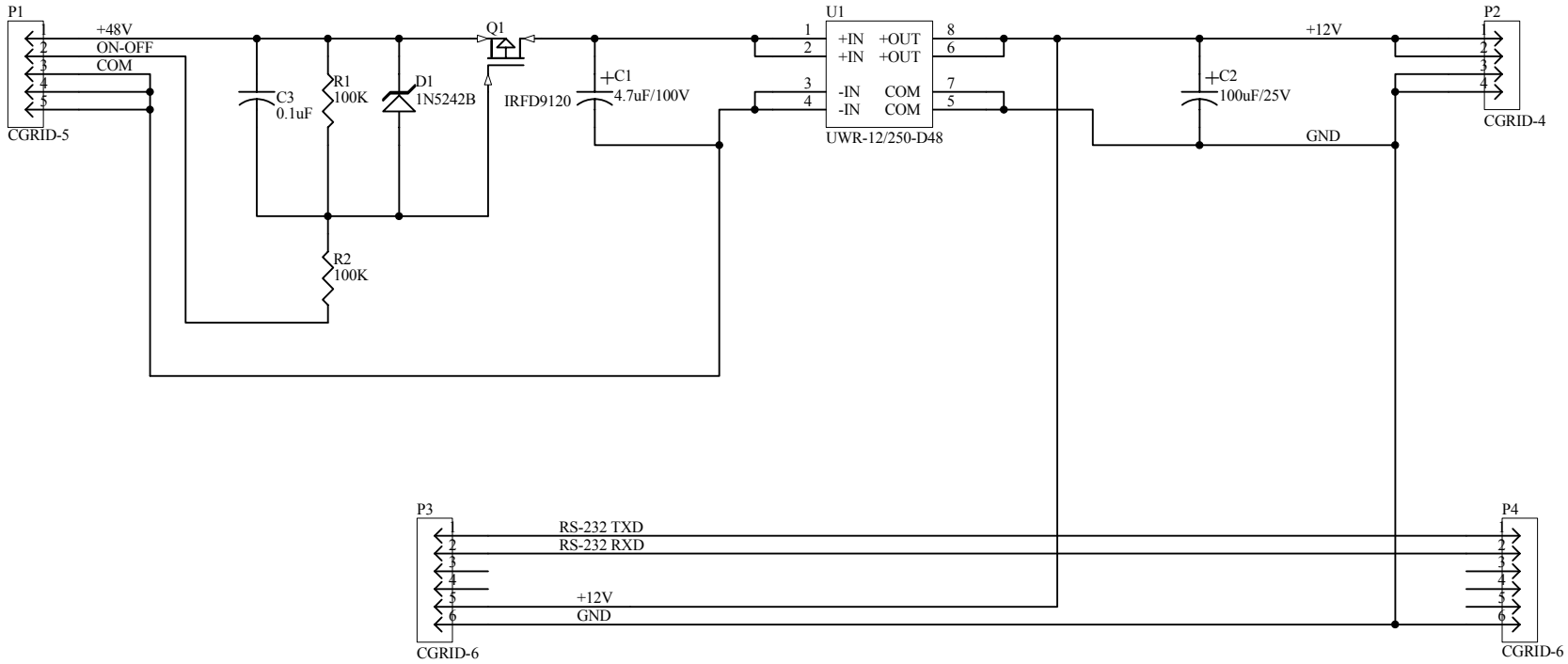

Ken Smith Laboratory
Scripps Institution of Oceanography/UCSD
9500 Gilman Dr.
La Jolla, CA 92093-0202
Tel: 619-534-4858

Title
H2O Current Meter Power Board

Size	Number	Revision
Letter		A

Date:	2/9/2010	Sheet 1 of 1
File:	\\..\Currmet power.SchDoc	Drawn By: