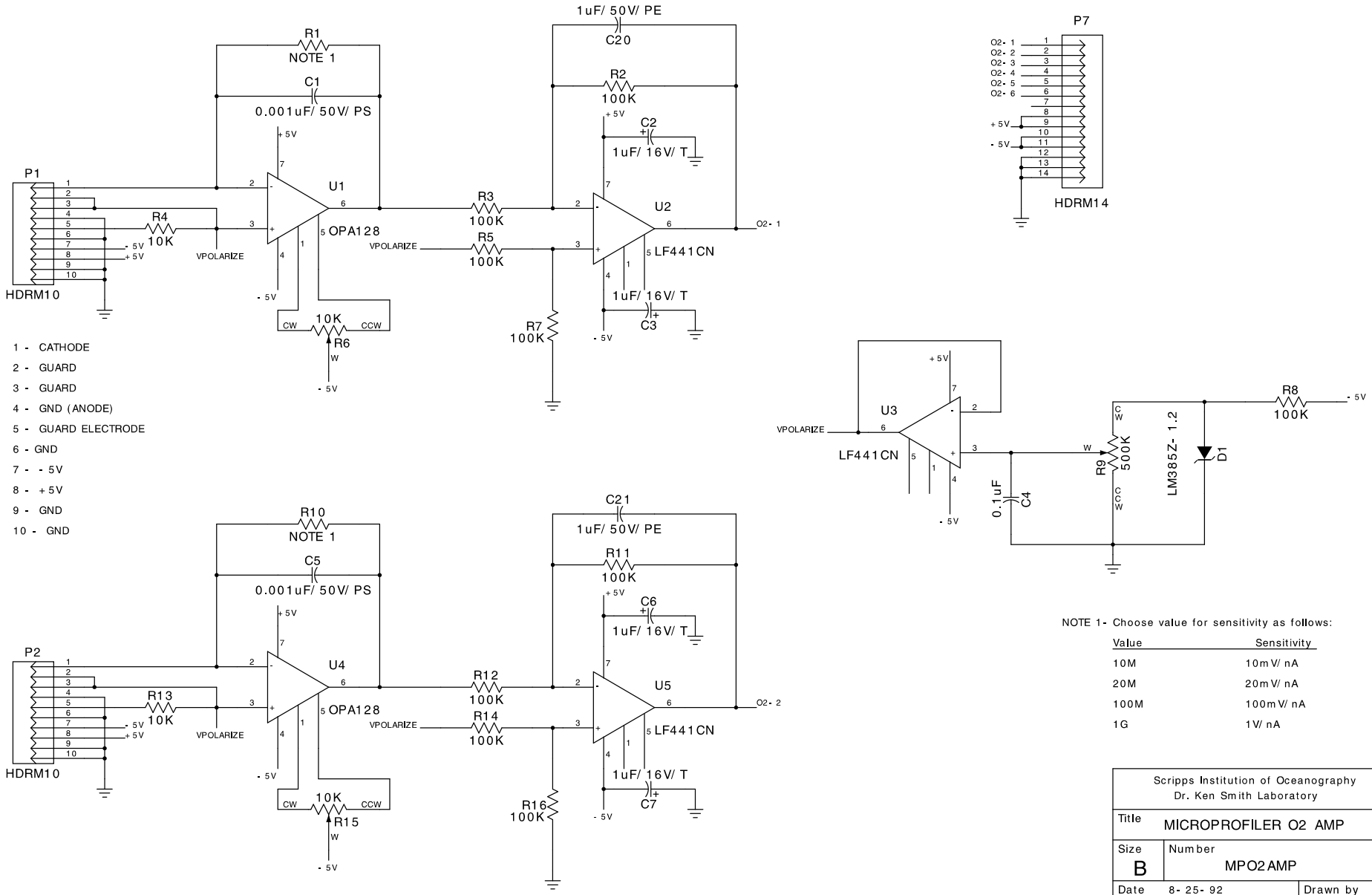

NOTE 1- Choose value for sensitivity as follows:

Value	Sensitivity
10M	10mV/ nA
20M	20mV/ nA
100M	100mV/ nA
1G	1V/ nA

Scripps Institution of Oceanography
Dr. Ken Smith Laboratory

Title	MICROPROFILER O2 AMP	
Size B	Number MPO2AMP	Rev A
Date 8- 25- 92		Drawn by RCG
Filename MPO2AMP.S01		Sheet 1 of 3