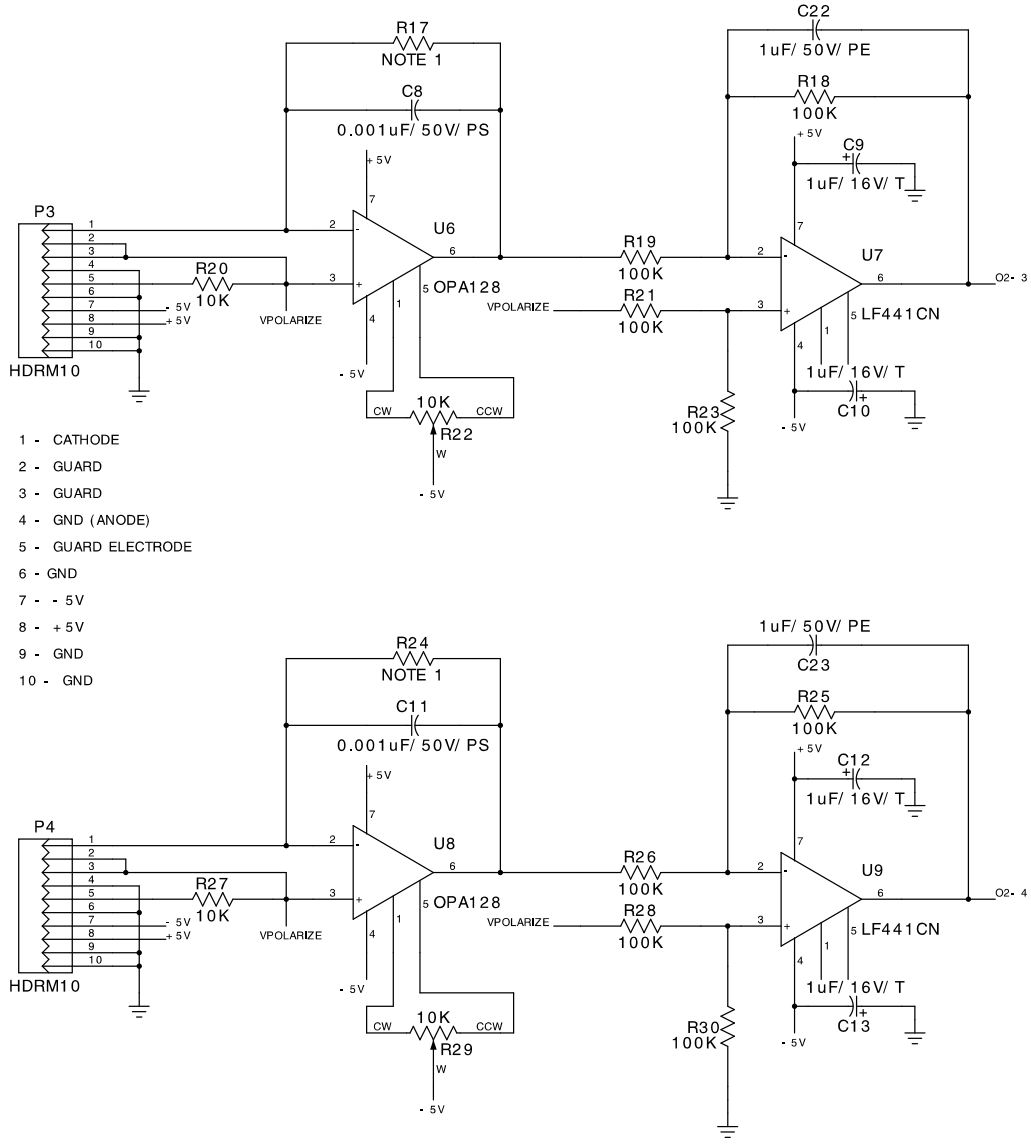

Scripps Institution of Oceanography Dr. Ken Smith Laboratory		
Title MICROPROFILER O2 AMP		
Size B	Number MPO2AMP	Rev A
Date 8- 25- 92	Drawn by RCG	
Filename MPO2AMP.S02	Sheet 2 of 3	