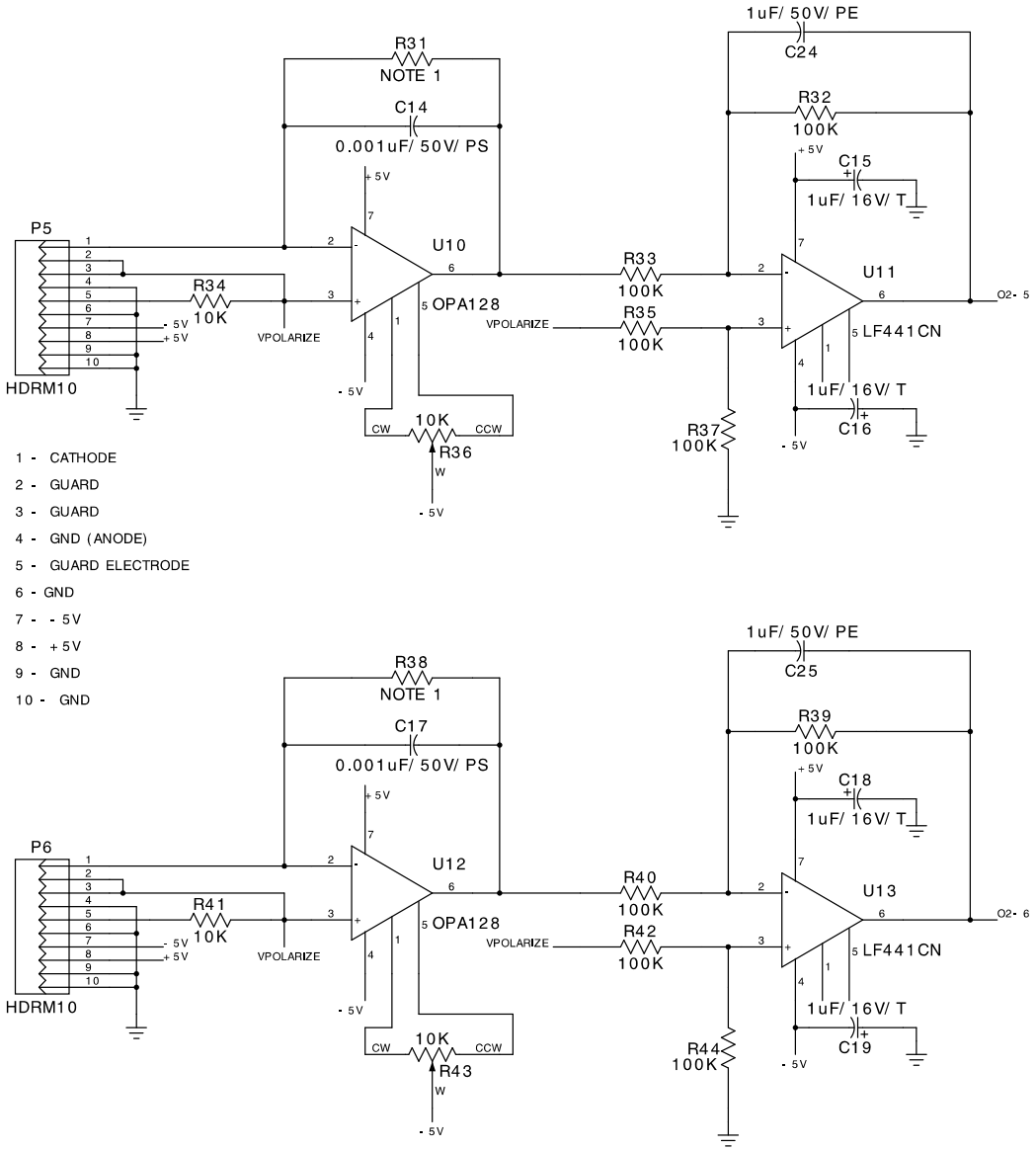

Scripps Institution of Oceanography
Marine Biology Research Division
Dr. Ken Smith Laboratory

Title	MICROPROFILER O2 AMP	
Size B	Number MPO2AMP	Rev A
Date 8- 25- 92		Drawn by RCG
Filename MPO2AMP.S03		Sheet 3 of 3