THE INFORMATION CONTAINED IN THIS DRAWING IS THE SOLE PROPERTY OF MBARI ANY REPRODUCTION IN PART OR WHOLE WITHOUT THE WRITTEN PERMISSION OF MBARI IS PROHIBITED.

REVISIONS

REV.	DESCRIPTION	DATE	APPROVED
A	Softer Urathan; add screw conn. to piston	4/4/07	BWH

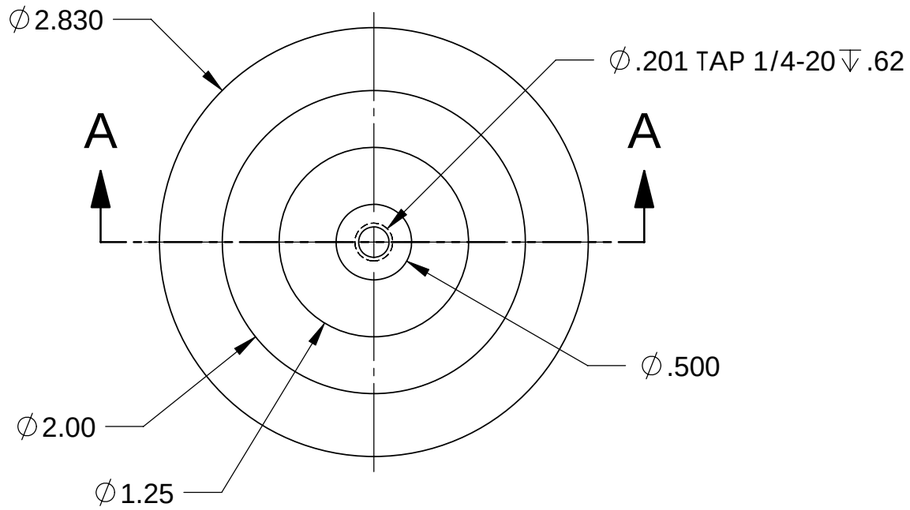

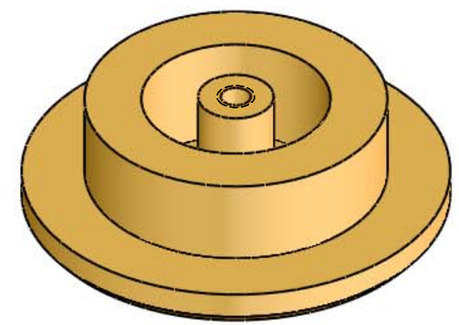

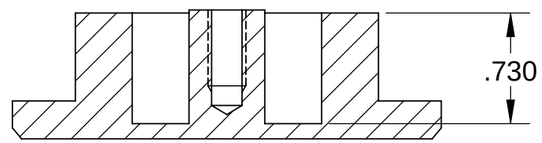

SECTION A-A

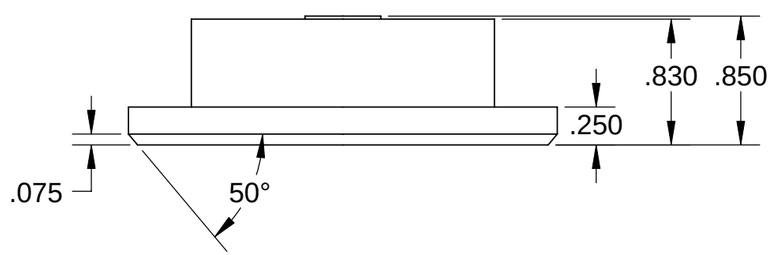

6 PARTS **95A Durometer URATHANE**

NEXT ASSY Description	NEXT ASSY Number

THIRD ANGLE PROJECTION

UNLESS OTHERWISE SPECIFIED TOLERANCES ARE:

1 PLACE DIM ±1/16	2 PLACE DIM ±.02	3 PLACE DIM ±.005	ANGLES ±1°

1. DIMENSIONS ARE IN INCHES
2. DIMENSION LIMITS HELD AFTER PLATING.
3. REMOVE BURRS AND SHARP EDGES .015 MAX.
4. MACHINED FILLET RADII .0150-.030.
5. MACHINED DIAMETERS ON A COMMON CENTERLINE CONCENTRIC WITHIN .OO5
6. PERPENDICULARITY & PARALLELISM OF MACHINED SURFACES .002 PER INCH. MAX .012 INCHES FOR SINGLE SURFACE.

DO NOT SCALE DRAWING

APPROVALS	DATE
DRAWN JOHN FERREIRA	3/20/07
ENGINEER BWH	
CHECKED BWH	4/3/07
PROJECT NO. 900737	
PROJECT Benthic Rover	
WEIGHT	

Monterey Bay Aquarium Research Institute
MBARI
7700 Sandholdt RD.
Moss Landing, CA 95039
PH: (831) 775-1700

Rover Resp. Valve Plunger

SIZE	DWG. NO.	REV.
B	1003399	A

SCALE 1:1 | CAD FILE: | SHEET 1 OF 1

Status: