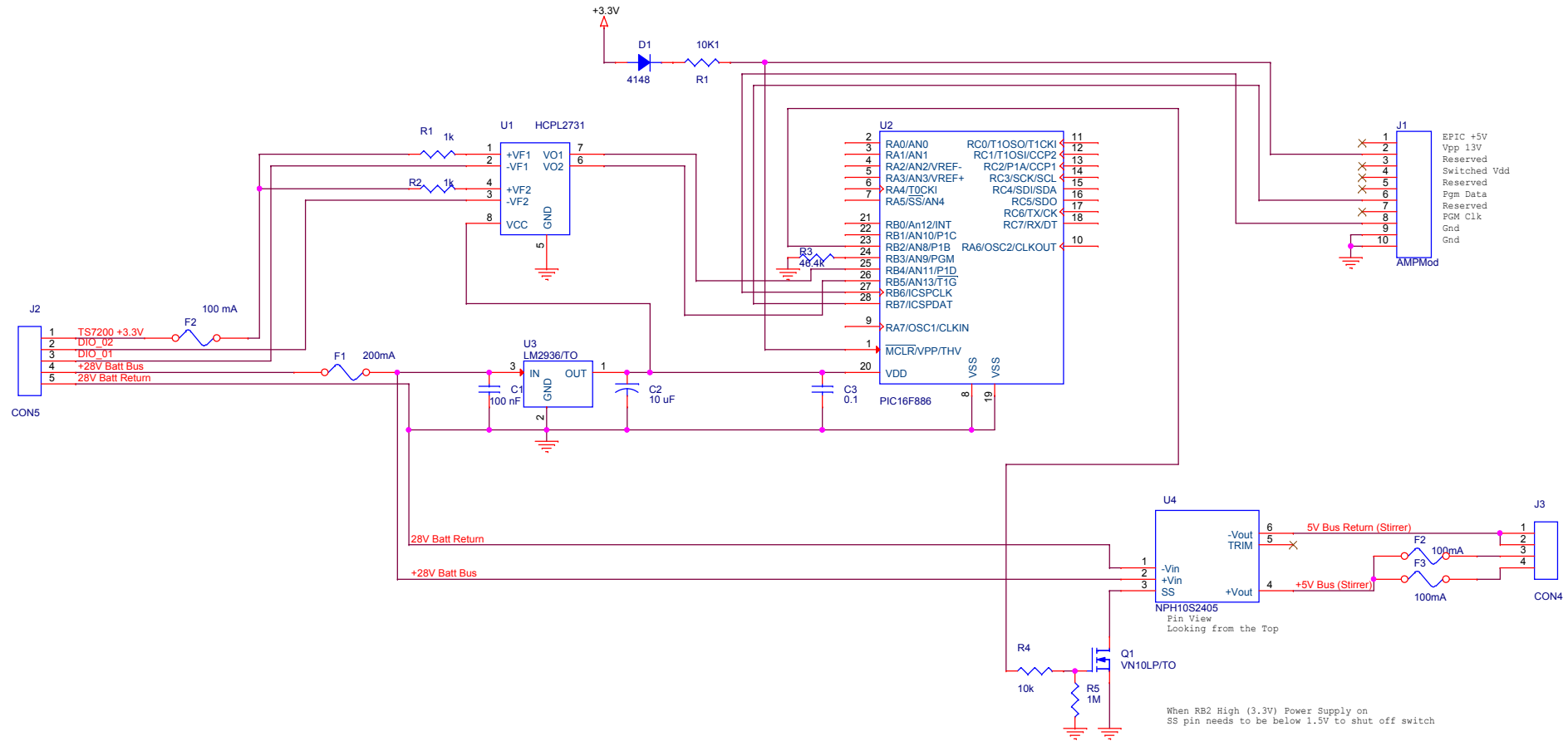

Title	<Title>	
Size B	Document Number <Doc>	Rev <RevCod
Date: Wednesday, January 30, 2013	Sheet 1 of 47	