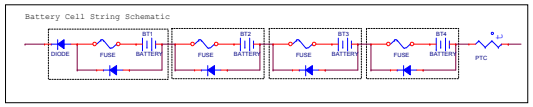

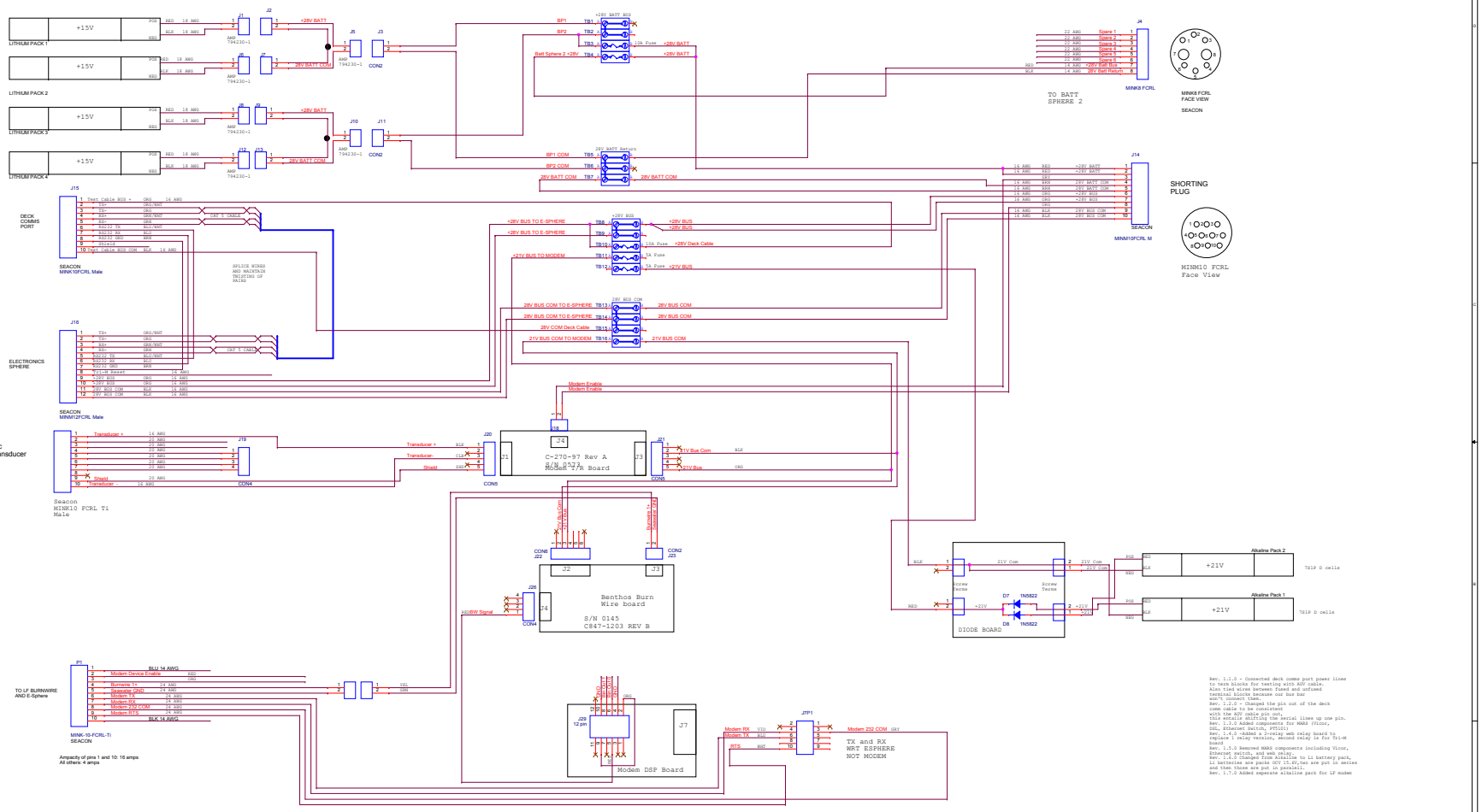

Rev. 1.1.0 - Connected deck comms port power lines to term blocks for testing with AUV cable. Also tied wires between fused and unfused terminal blocks because our bus bar is not fused yet.
Rev. 1.2.0 - Changed the pin out of the deck comm cable to be consistent with the AUV cable pin out, this entails shifting the serial lines up one pin.
Rev. 1.3.0 Added components for NARS (Vicor, DSL, Ethernet Switch, PT100 Temp sensor) and added a web relay board to replace 1 relay (relays, second relay is for Ti1-M board
Rev. 1.5.0 Removed NARS components including Vicor, Ethernet switch, and web relay.
Rev. 1.6.0 Changed alkaline pack to Li battery pack, Li batteries are packs AUV 15.0V,two are put in series and then those are put in paralell.
Rev. 1.7.0 Added seperate alkaline pack for LF modem

Monterey Bay Aquarium Research Institute 7700 Sandholt Road, Moss Landing CA 95039			
Engineer: <Engineer> Designer: <Designer>	Title: <Title>		Project: <Project>
	Size: D	Document Number: <Doc>	Rev: <Rev>
	Date: Monday, Nov 15, 2010	Sheet 1 of 42	