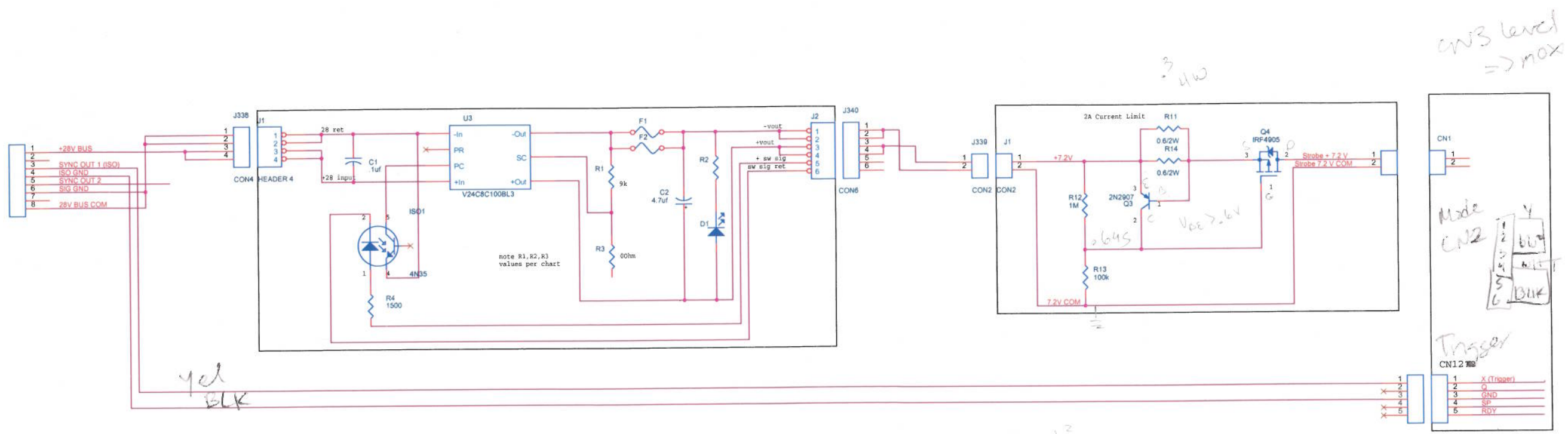

$$V_0 = 24V\left(\frac{100K}{R_2+100K}\right)$$

$$(100K + R_2)\left(\frac{.645}{24}\right) = 100K$$

$$\frac{(.6V)^2}{.3}$$

$$R_{12} \cong 3.6M$$

$$R_{14/11} = .8\Omega \ \tfrac{1}{2}\text{WATT}$$

$$V_{drop} = 2A(.3) = .6V$$

$$(.75A)\ .6V$$

$$.6V = .75A\ R$$

$$R = .8$$

Title	Rover: Transit Strobe Charge Circuit
Size C	Document Number <Doc>
Rev	<RevCode>
Date: Wednesday, May 21, 2008	Sheet 1 of 1