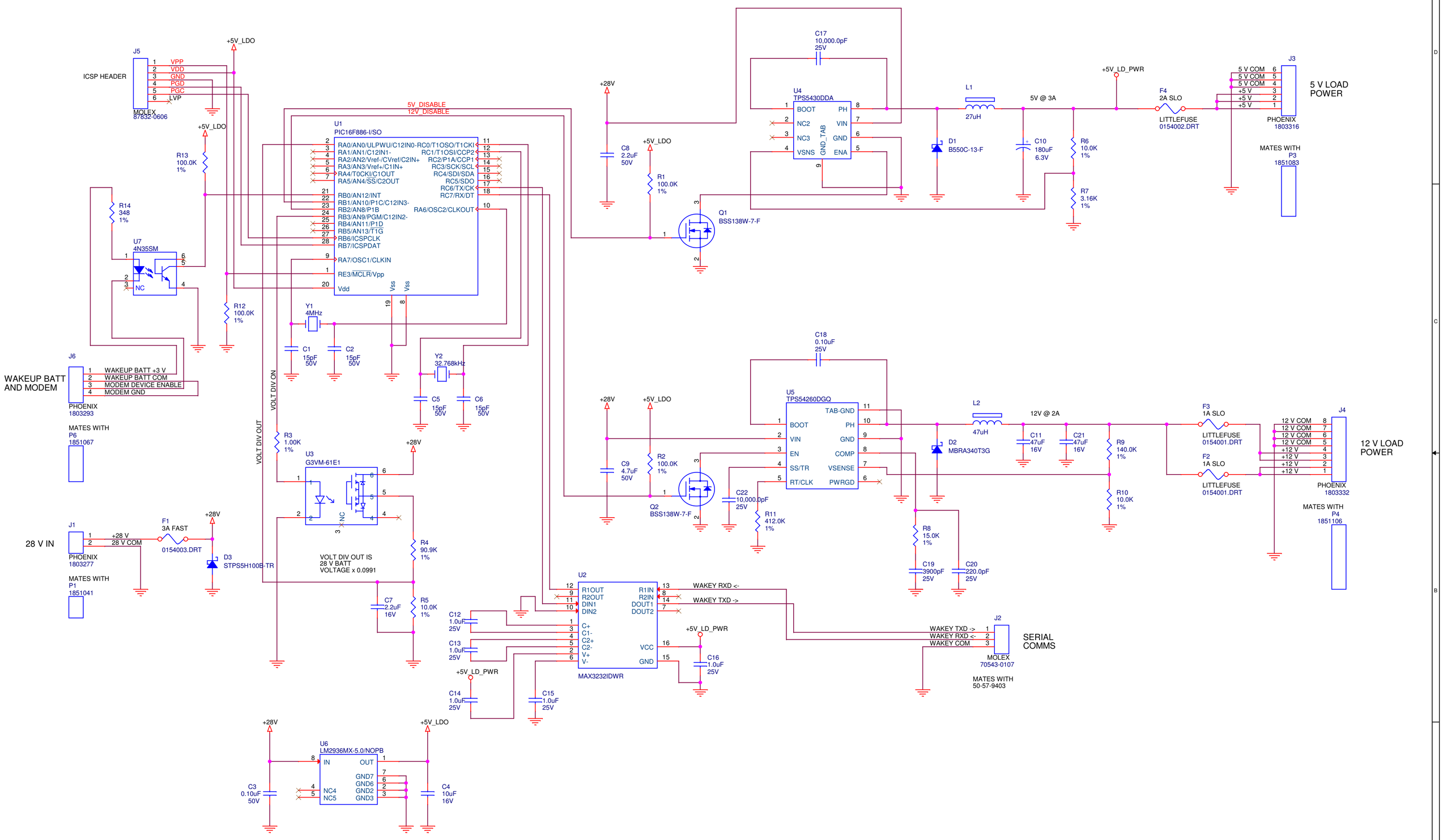

M B A R I	Monterey Bay Aquarium Research Institute 7700 Sandhold Road, Moss Landing, CA 95039		
	Title Benthic Rover: Wakey Board		
Engineer McGill	Size C	Document Number 10020813	Layout File <Layout File>	Rev 1.1.0
Layout <Layout>	Date: Tuesday, April 23, 2013	Sheet 1 of 1		