THE INFORMATION CONTAINED IN THIS DRAWING IS THE SOLE PROPERTY OF MBARI ANY REPRODUCTION IN PART OR WHOLE WITHOUT THE WRITTEN PERMISSION OF MBARI IS PROHIBITED.

REVISIONS			
	INITIAL RELEASE	X/XX/01	J.E.

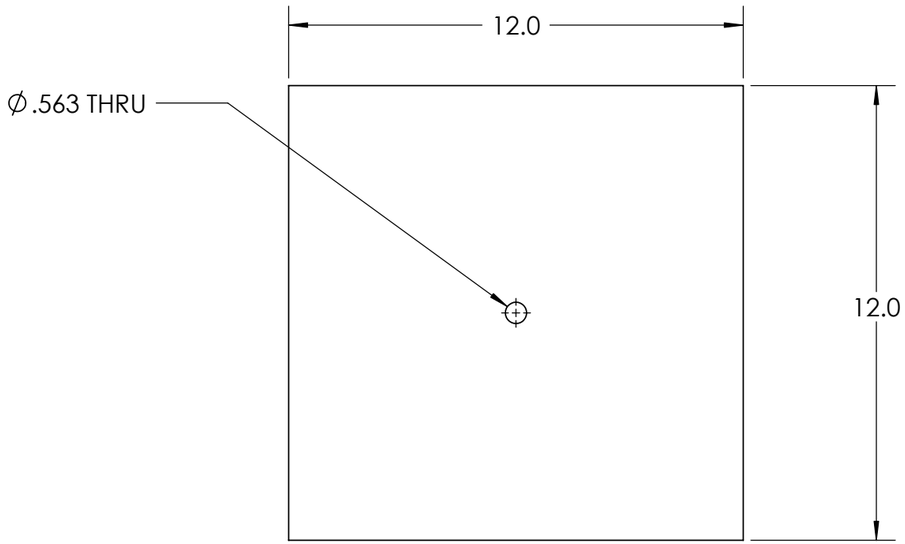

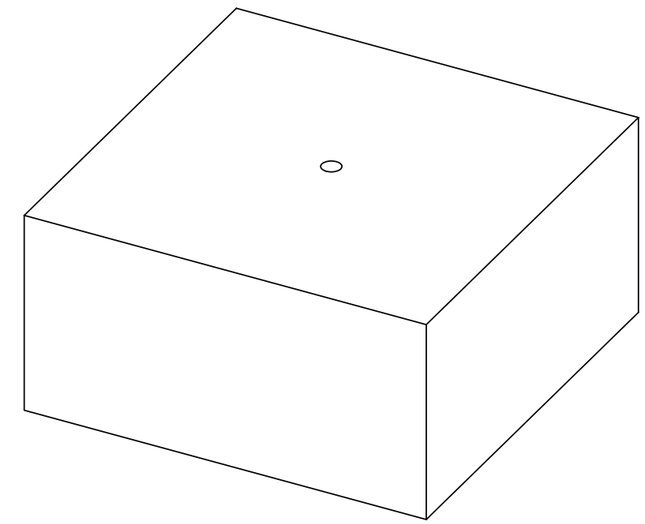

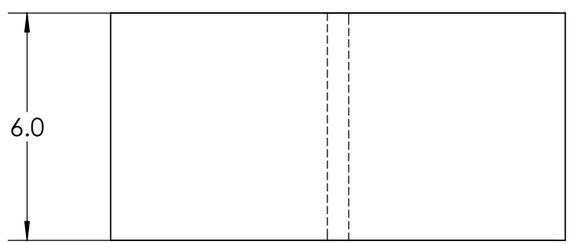

32 EA. REQUIRED

NOTES: (CONT. FROM TITLE BLOCK)

ITEM NO.	QTY.	Part_Number	DESCRIPTION	Vendor	MATERIAL
1	1	TG-24	Flotation	CRP Group	Syntactic Foam

BILL OF MATERIALS

Shop / Q.C.	
Inspector	
Shop Foreman	
Engineer	
NEXT ASSY Description	NEXT ASSY Number
Application	

UNLESS OTHERWISE SPECIFIED TOLERANCES ARE:

1 PLACE DIM ±1/16	2 PLACE DIM ±.02	3 PLACE DIM ±.005	ANGLES ±1°

1. DIMENSIONS ARE IN INCHES
2. DIMENSION LIMITS HELD AFTER PLATING.
3. REMOVE BURRS AND SHARP EDGES .015 MAX.
4. MACHINED FILLET RADII .0150-.030.
5. MACHINED DIAMETERS ON A COMMON CENTERLINE CONCENTRIC WITHIN .005
6. PERPENDICULARITY & PARALLELISM OF MACHINED SURFACES .002 PER INCH. MAX .012 INCHES FOR SINGLE SURFACE.

DO NOT SCALE DRAWING

APPROVALS	DATE
DRAWN J. ERICKSON	4/4/05
ENGINEER J. ERICKSON	4/4/05
CHECKED	
PROJECT NO. 900515	
PROJECT IODP BOREHOLE	
WEIGHT 11.979lb.	

Monterey Bay Aquarium Research Institute
MBARI
7700 Sandholdt RD.
Moss Landing, CA 95039
PH: (831) 775-1700

MONTEREY BOREHOLE Exp312
CRP_TG-24

SIZE	DWG. NO.	REV.
B	1002711.DWG-013	

SCALE 1:8 | CAD FILE: MECH ENG ON TORNADO | SHEET 1 OF 1