THE INFORMATION CONTAINED IN THIS DRAWING IS THE SOLE PROPERTY OF MBARI ANY REPRODUCTION IN PART OR WHOLE WITHOUT THE WRITTEN PERMISSION OF MBARI IS PROHIBITED.

REVISIONS			
	INITIAL RELEASE	X/XX/01	J.E.

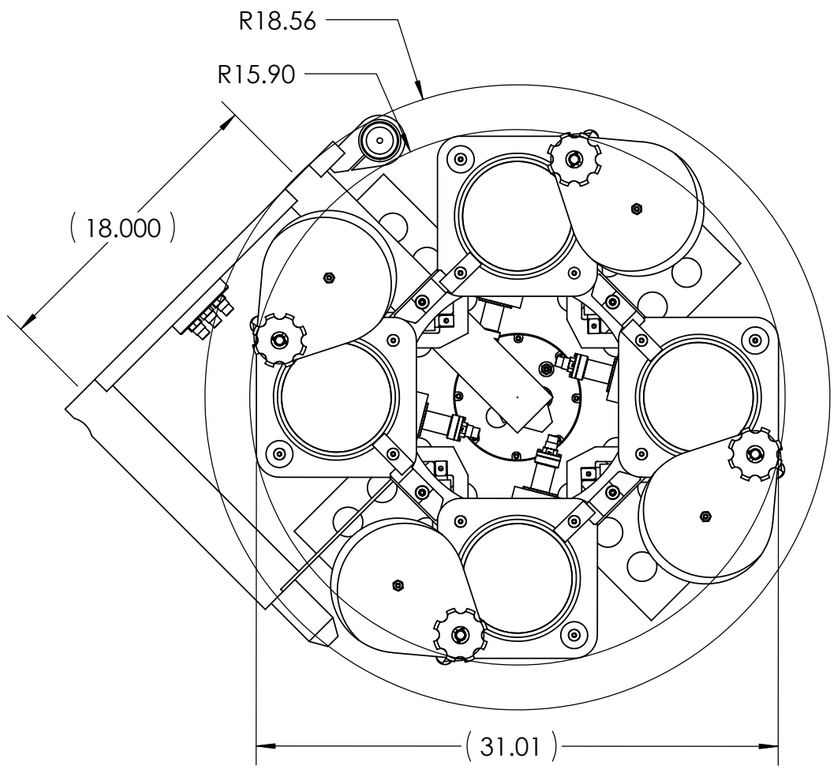

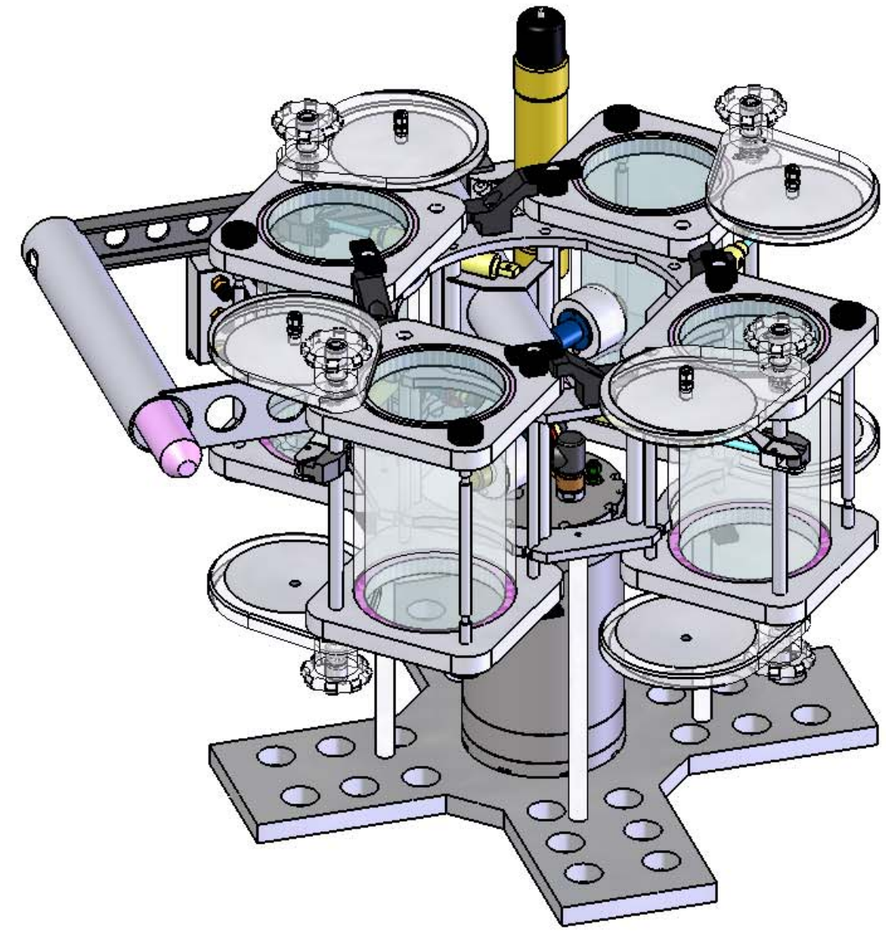

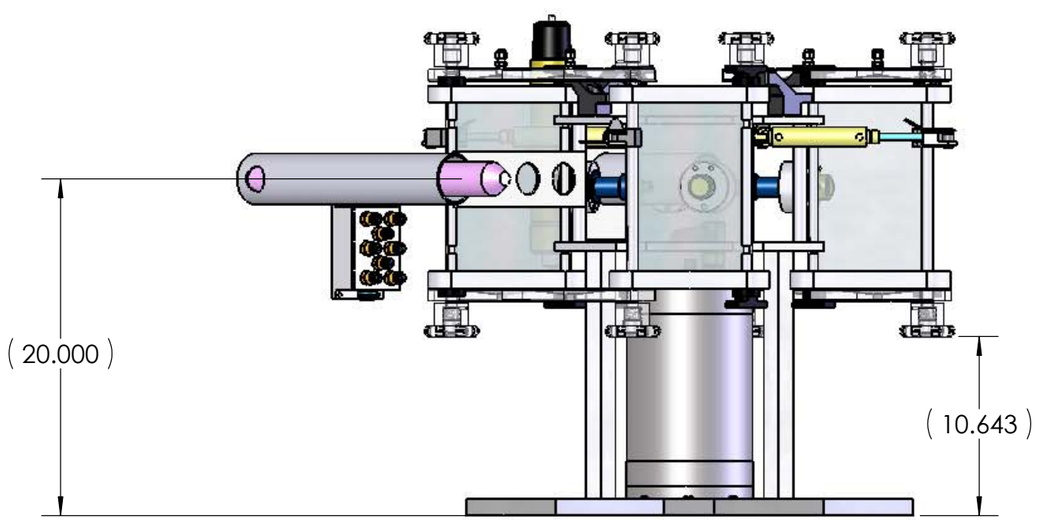

ITEM NO.	Default/QTY.	Part_Number	DESCRIPTION	MATERIAL
14	1	1003215.DWG	HomerPro Clamp	UHMW P.E.
13	12	9713K10	Belville Washer	AISI 302S.S.
12	4		Fender Washer 1.25 O.D.	Fiber Glass
11	4	1003214.DWG	Detritus Latch	Black Delrin (Acetal)
10	1	7835	Homer Pro	
9	1		Junction Box	
8	1		Birns Elec. Hsg.	
7	4		1/2 NOM. Schd40, PVC Pipe x 14.75 in.	
6	4		1/4-20 Threaded Rod x 16.25 in.	316 SS
5	1	1003201.dwg	MRS_Base Pad	UHMW P.E.
4	1	1003209	STAB TUBE ASSEMBLY	
3	4		Detritus AllenAir Cyl. Assembly	
2	4		Detritus Sampler_Optode Assembly	
1	1	1003209	MRS Frame Weldment	

BILL OF MATERIALS

Shop / Q.C.	
Inspector	
Shop Foreman	
Engineer	
NEXT ASSY Description	NEXT ASSY Number
Application	

UNLESS OTHERWISE SPECIFIED TOLERANCES ARE:

1 PLACE DIM	2 PLACE DIM	3 PLACE DIM	ANGLES
±1/16	±.02	±.005	±1°

1. DIMENSIONS ARE IN INCHES
2. DIMENSION LIMITS HELD AFTER PLATING.
3. REMOVE BURRS AND SHARP EDGES .015 MAX.
4. MACHINED FILLET RADII .0150-.030.
5. MACHINED DIAMETERS ON A COMMON CENTERLINE CONCENTRIC WITHIN .005
6. PERPENDICULARITY & PARALLELISM OF MACHINED SURFACES .002 PER INCH. MAX .012 INCHES FOR SINGLE SURFACE.

DO NOT SCALE DRAWING

APPROVALS	DATE
DRAWN J. ERICKSON	7/17/06
ENGINEER J. ERICKSON	7/17/06
CHECKED	
PROJECT NO. 900617	
PROJECT MRS	
WEIGHT 203.3lb.	

Monterey Bay Aquarium Research Institute
MBARI
7700 Sandholdt RD.
Moss Landing, CA 95039
PH: (831) 775-1700

MIDWATER RESPIROMETER
MRS Assembley MRS Assembly

SIZE	DWG. NO.	REV.
B	1003202.DWG	

SCALE 1:16 | CAD FILE: MECH ENG ON TORNADO | SHEET 1 OF 1

NOTES: (CONT. FROM TITLE BLOCK)