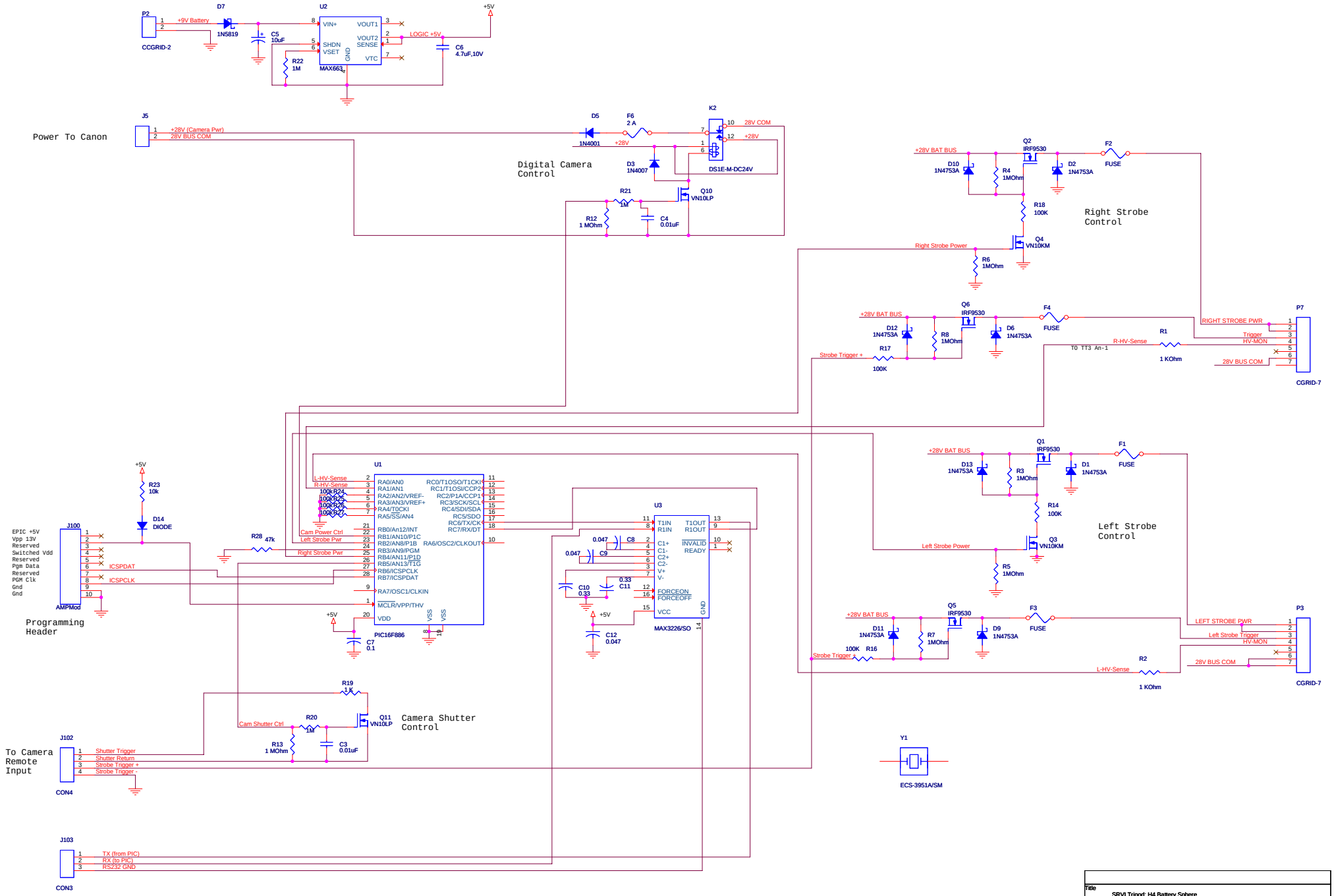


| | | | |
|---|---|---|---|
| Title | SRVI Tripod: H4 Battery Sphere | | |
| Size C | Document Number <Doc> | | Rev <RevCode> |
| Date: Thursday, September 16, 2010 | Sheet 1 of 1 | | |