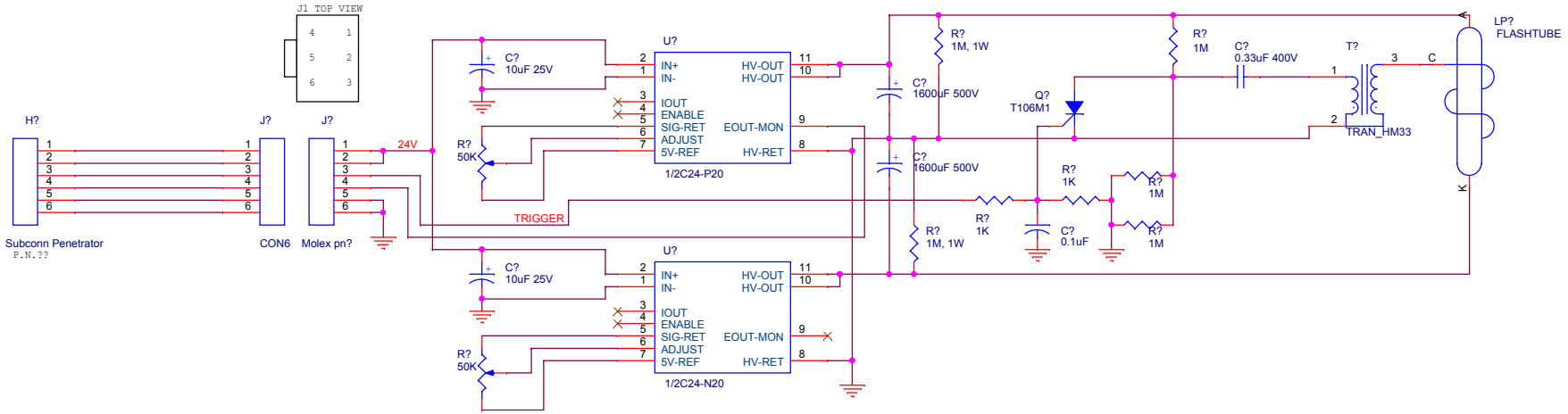

Title	SRVI Tripod: H1 Left Strobe	
Size B	Document Number <Doc>	Rev <RevCod
Date: Thursday, March 14, 2013	Sheet 0 of 11	