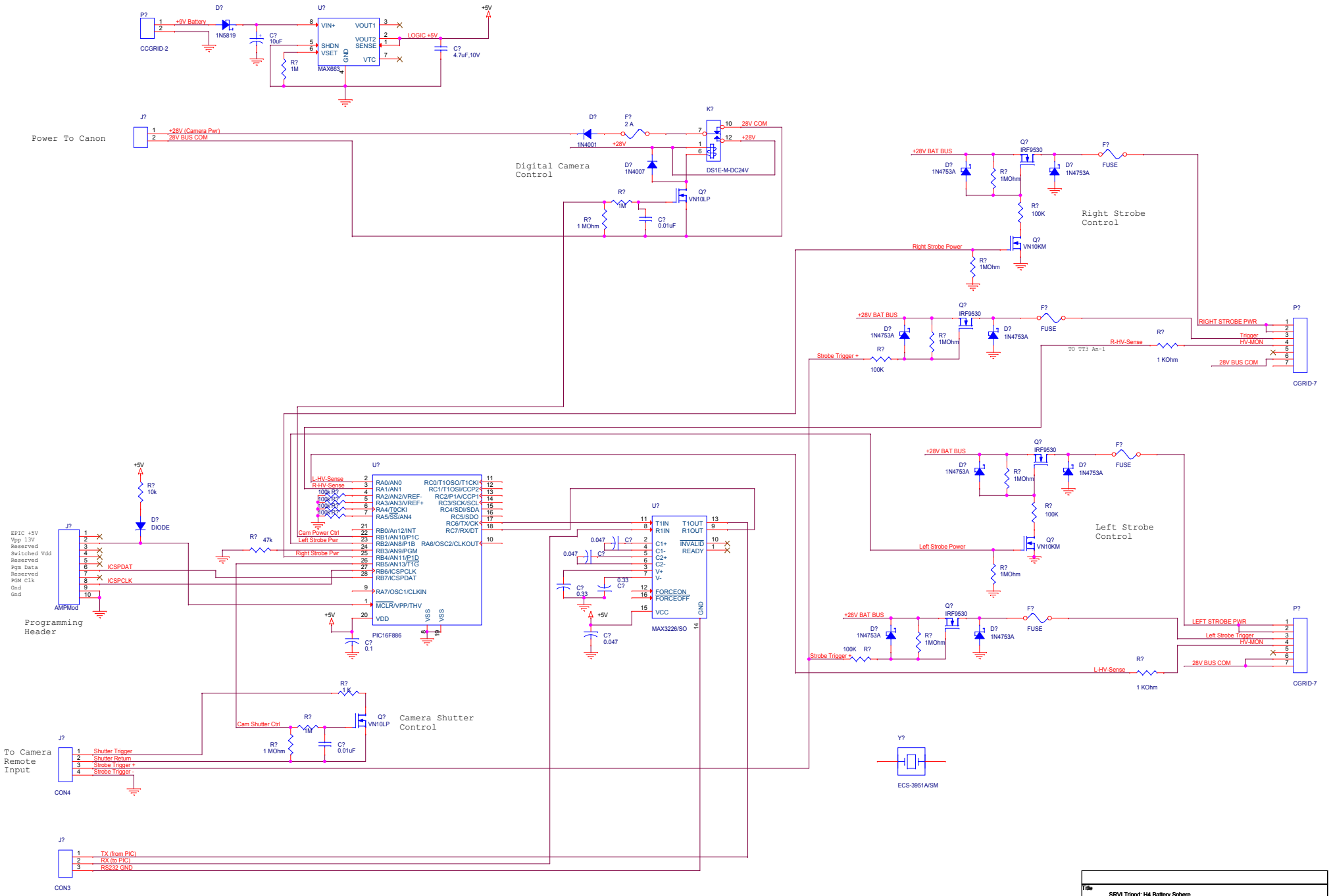
P?
CCGRID-2
+9V Battery
D?
1N5819
C?
10uF
U?
VIN+
SHDN
VSET
GND
VOUT1
VOUT2
SENSE
VTC
MAX663
R?
1M
LOGIC +5V
+5V
C?
4.7uF,10V
Power To Canon
J?
+28V (Camera Pwr)
28V BUS COM
Digital Camera
Control
D?
1N4001
F?
2 A
+28V
K?
28V COM
+28V
DS1E-M-DC24V
D?
1N4007
Q?
VN10LP
R?
1M
R?
1 MOhm
C?
0.01uF
+28V BAT BUS
Q?
IRF9530
D?
1N4753A
R?
1MOhm
F?
FUSE
R?
100K
Right Strobe
Control
Q?
VN10KM
Right Strobe Power
R?
1MOhm
RIGHT STROBE PWR
Trigger
HV-MON
28V BUS COM
P?
CGRID-7
R-HV-Sense
TO TT3 An-1
R?
1 KOhm
Strobe Trigger +
R?
100K
+28V BAT BUS
Q?
IRF9530
D?
1N4753A
R?
1MOhm
F?
FUSE
R?
100K
Left Strobe
Control
Q?
VN10KM
Left Strobe Power
R?
1MOhm
LEFT STROBE PWR
Left Strobe Trigger
HV-MON
28V BUS COM
P?
CGRID-7
L-HV-Sense
R?
1 KOhm
Strobe Trigger +
R?
100K
+28V BAT BUS
Q?
IRF9530
D?
1N4753A
R?
1MOhm
F?
FUSE
+5V
R?
10k
D?
DIODE
J?
EPIC +5V
Vpp 13V
Reserved
Switched Vdd
Reserved
Pgm Data
Reserved
PGM Clk
Gnd
Gnd
AMPMod
ICSPDAT
ICSPCLK
Programming
Header
R?
47k
U?
L-HV-Sense
R-HV-Sense
100K R?
100K R?
100K R?
100K R?
Cam Power Ctrl
Left Strobe Pwr
Right Strobe Pwr
RA0/AN0
RA1/AN1
RA2/AN2/VREF-
RA3/AN3/VREF+
RA4/T0CKI
RA5/SS/AN4
RB0/An12/INT
RB1/AN10/P1C
RB2/AN8/P1B
RB3/AN9/PGM
RB4/AN11/P1D
RB5/AN13/T1G
RB6/ICSPCLK
RB7/ICSPDAT
RA7/OSC1/CLKIN
MCLR/VPP/THV
VDD
VSS
VSS
RC0/T1OSO/T1CKI
RC1/T1OSI/CCP2
RC2/P1A/CCP1
RC3/SCK/SCL
RC4/SDI/SDA
RC5/SDO
RC6/TX/CK
RC7/RX/DT
RA6/OSC2/CLKOUT
PIC16F886
+5V
C?
0.1
U?
T1IN
R1IN
C1+
C1-
C2+
C2-
V+
V-
T1OUT
R1OUT
INVALID
READY
FORCEON
FORCEOFF
VCC
GND
MAX3226/SO
0.047
C?
0.047
C?
C?
0.33
0.33
C?
+5V
C?
0.047
R?
1K
Q?
VN10LP
Cam Shutter Ctrl
R?
1M
R?
1 MOhm
C?
0.01uF
Camera Shutter
Control
To Camera
Remote
Input
J?
Shutter Trigger
Shutter Return
Strobe Trigger +
Strobe Trigger -
CON4
J?
TX (from PIC)
RX (to PIC)
RS232 GND
CON3
Y?
ECS-3951A/SM
Digital Camera
Interface Board
Title
SRVI Tripod: H4 Battery Sphere
Size
C
Document Number
<Doc>
Rev
<RevCode>
Date:
Thursday, March 14, 2013
Sheet
0
of
11