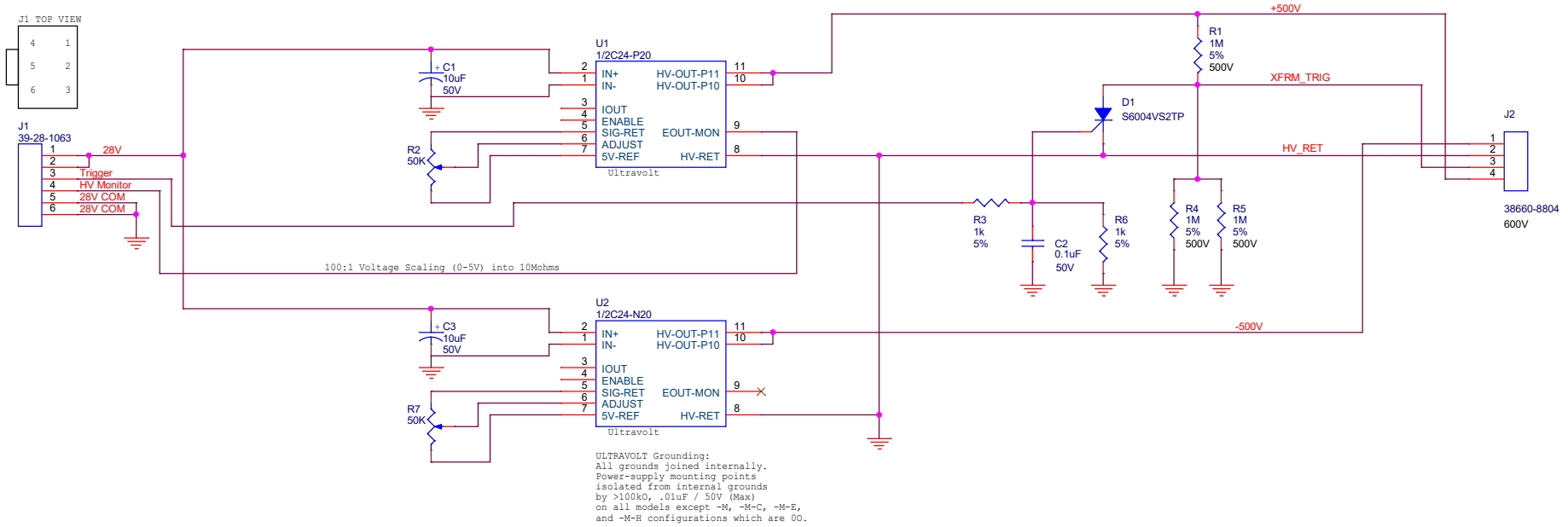

ULTRAVOLT Grounding:
All grounds joined internally.
Power-supply mounting points
isolated from internal grounds
by >100kO, .01uF / 50V (Max)
on all models except -M, -M-C, -M-E,
and -M-H configurations which are OO.

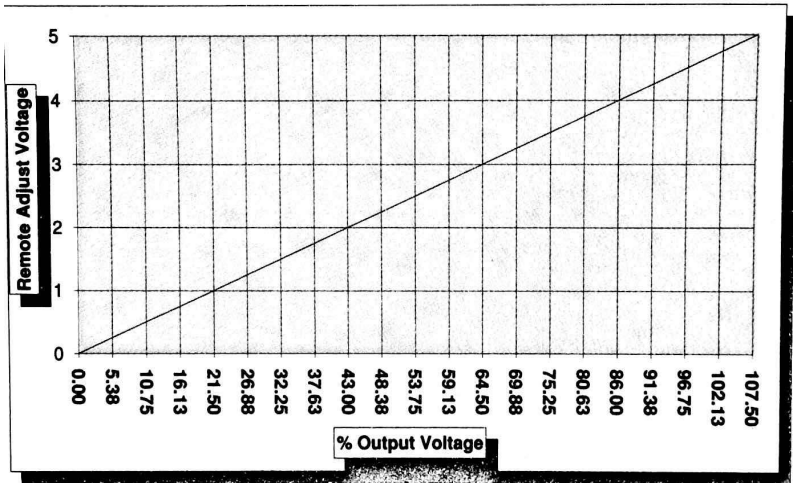

MBARI	Monterey Bay Aquarium Research Institute 7700 Sandhold Road, Moss Landing, CA 95039		
	Title Camera Tripod CAP Charger / Strobe Trigger		
Engineer A.SHERMAN	Size B	Document Number 10021171	Layout File <Layout File>	Rev A
Layout J.ROSAL	Date: Wednesday, March 11, 2015		Sheet 1 of 1	