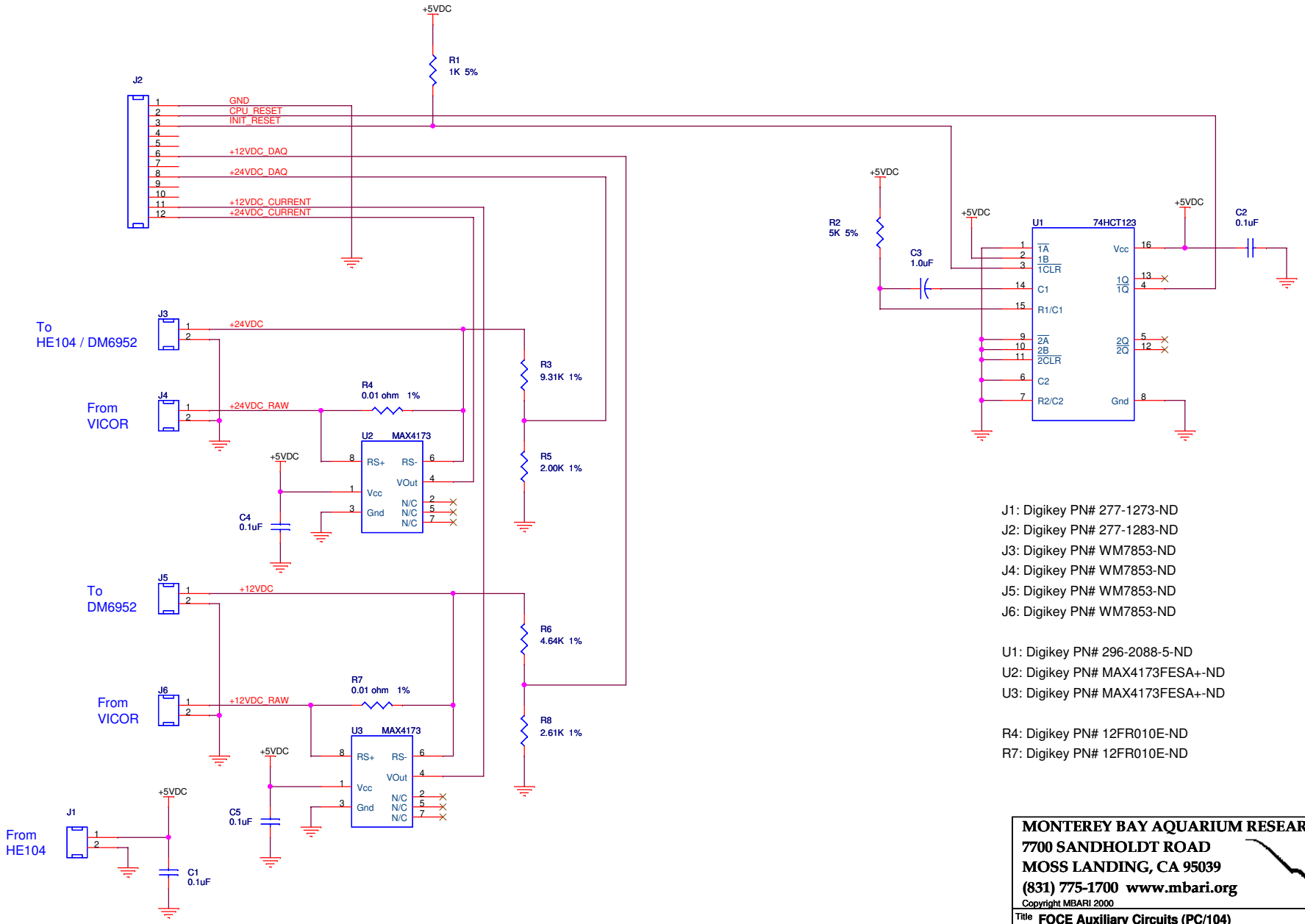

J1: Digikey PN# 277-1273-ND
J2: Digikey PN# 277-1283-ND
J3: Digikey PN# WM7853-ND
J4: Digikey PN# WM7853-ND
J5: Digikey PN# WM7853-ND
J6: Digikey PN# WM7853-ND

U1: Digikey PN# 296-2088-5-ND
U2: Digikey PN# MAX4173FESA+-ND
U3: Digikey PN# MAX4173FESA+-ND

R4: Digikey PN# 12FR010E-ND
R7: Digikey PN# 12FR010E-ND

MONTEREY BAY AQUARIUM RESEARCH INSTITUTE
7700 SANDHOLDT ROAD
MOSS LANDING, CA 95039
(831) 775-1700 www.mbari.org

Copyright MBARI 2000

Title FOCE Auxiliary Circuits (PC/104)			Number <Doc>
Size B	Engineer Chad Kecy	Layout Jim Montgomery	Filename <Filename>	Rev A
	Date: Thursday, May 29, 2008	Sheet 1 of 1	