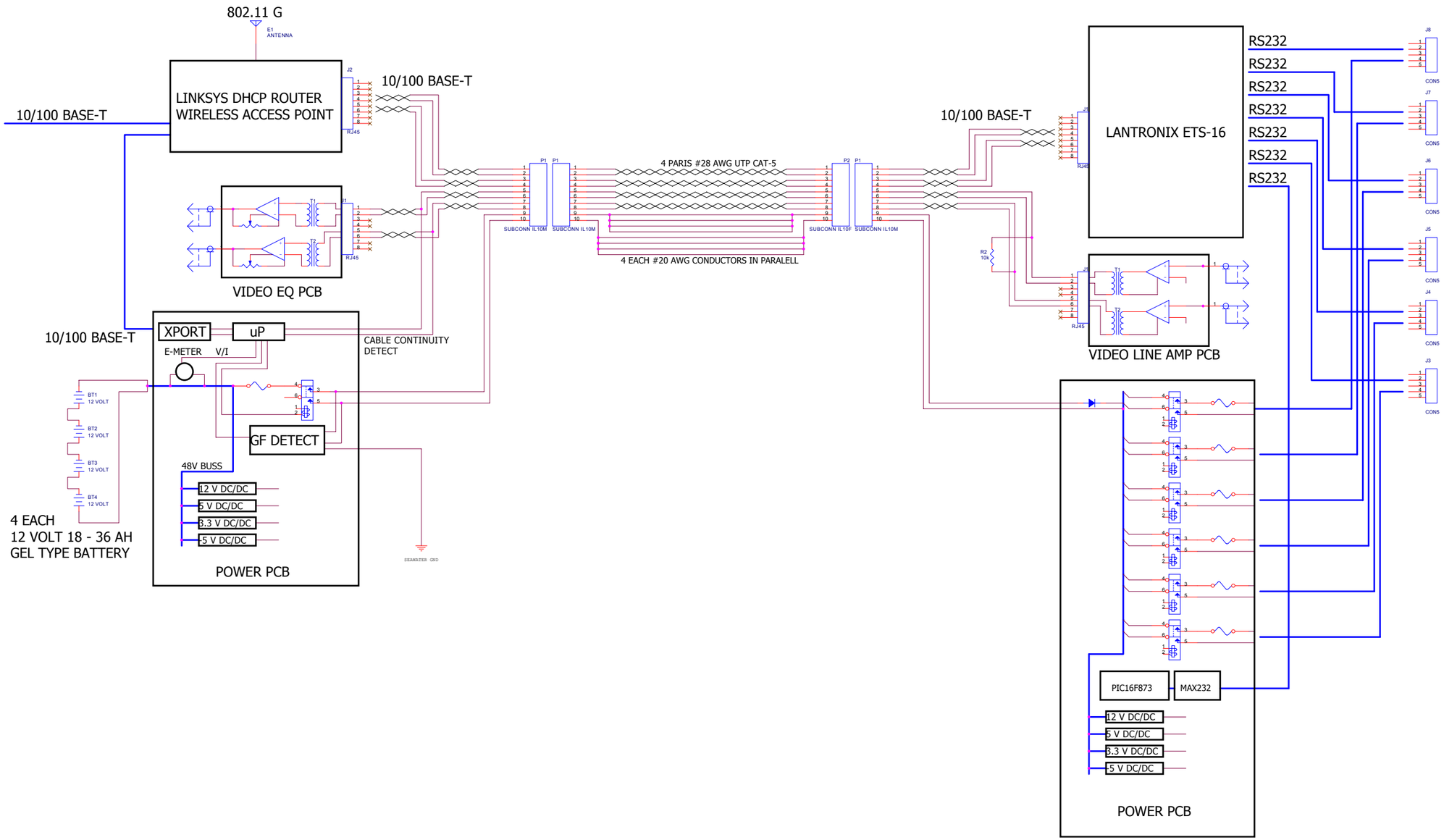

Title	<Title>		
Size D	Document Number <Doc>		Rev <RevCode>
Date: Friday, April 09, 2004		Sheet 1 of 1	