DRAWING NO.	ISSUE NO.	
AB4013	0	A1
SHEET 1 OF 1		

CAD

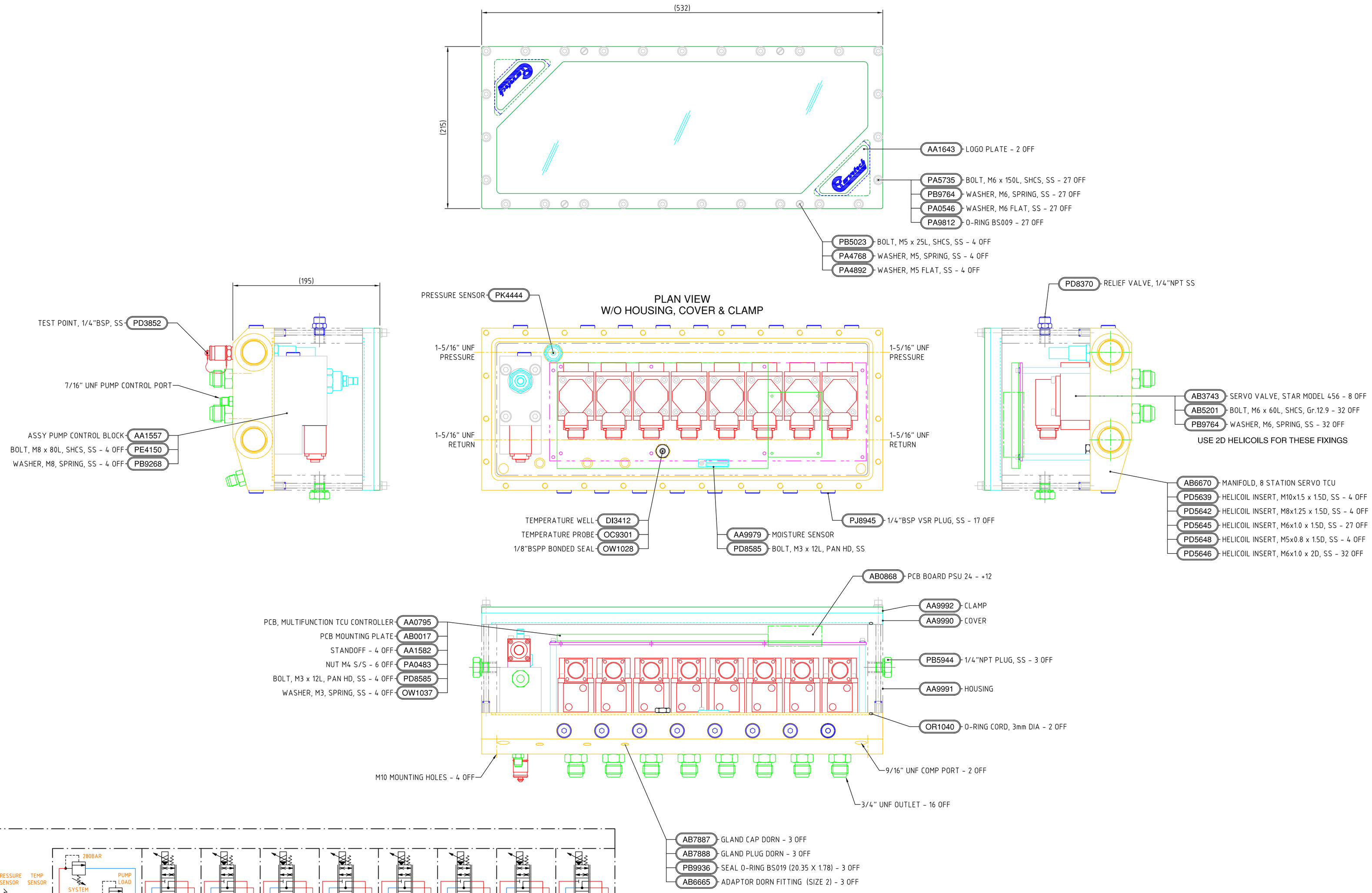

NO.	DATE	CHANGE	ZONE	DRAWN	CHECK

MATERIAL	DIMENSIONS	SCALE	PROJECTION 3RD
N/A	mm	1:2.5	

DESIGNED	DRAWN	TOLERANCES UNLESS OTHERWISE STATED				
RJG	M.BARNES	DIMENSION mm	UP TO 100	100 TO 300	300 TO 1000	OVER 1000
DATE 06/11/07	CHECKED RJP	FABRICATION	± 1.0	± 1.5	± 2.0	± 3.0
		MACHINED PART	± 0.15	± 0.4	± 0.8	± 1.0

TITLE: GA. 8-STATION SERVO TCU

DO NOT SCALE

DRAWING NO. AB4013 | ISSUE NO. 0 | SHEET 1 OF 1

ALL INTELLECTUAL PROPERTY RIGHTS SUBSISTING IN THESE DESIGNS ARE THE PROPERTY OF SOIL MACHINE DYNAMICS LTD. NO COPY IS TO BE MADE WITHOUT THE WRITTEN PERMISSION OF SOIL MACHINE DYNAMICS LTD. ANY PATENT APPLICATIONS, PATENTS AND/OR DESIGN APPLICATIONS, REGISTERED DESIGNS, DESIGN RIGHTS OR COPYRIGHT ARISING FROM OR CONTAINED IN THE DESIGNS ARE THE PROPERTY OF SOIL MACHINE DYNAMICS LTD AND ALL INFORMATION MUST BE HELD IN THE STRICTEST CONFIDENCE

Soil Machine Dynamics