C903 -MBARI

1	FRONT SHEET
2	24V REGULATED PSU'S
3	24V UN-REGULATED PSU'S & 48V REGULATED PSU'S
4	110V AC DISTRIBUTION
5	240V AC DISTRIBUTION & GYRO CARD
6	LIM VACUUM & TRIGGER CARDS
7	WAGO MODULES - DIGI I/P & O/P
8	WAGO MODULES - DIGI O/P
9	WAGO MODULES - DIGI O/P
10	WAGO MODULES - C.O. RELAY & ANA I/P
11	SIGNALS ISOLATION BOARD RS232
12	SIGNALS ISOLATION BOARD RS232
13	SIGNALS ISOLATION BOARD RS485
14	SIGNALS ISOLATION BOARD VIDEO
15	GROUND FAULT MONITORING BOARDS
16	FOCAL INTERFACE RACK
17	FACEPLATE CONNECTOR - POD POWER, FIBRE, 12ST VT
18	FACEPLATE CONNECTOR - JB1 SIG, JB1 POWER, JB2 POWER
19	FACEPLATE CONNECTOR - JB 2 SIG, TCU, TOOLSLED INTERFACE
20	FACEPLATE CONNECTOR - AUX JB, LAMP DIMMER

NOTES:

1. WIRE NUMBERS ALLOCATED TO THIS DRG ARE 400 - 652
2. LAST WIRE NUMBER USED 652
3. UNUSED WIRE Nos. ARE 458, 459, 463-467,494-499,552-556,559,562,564,576.
4. PAIR CABLE NUMBERS USED ON THIS DRG. ARE P1 TO P63
5. COAX CABLE NUMBERS USED ON THIS DRG. ARE X1 TO X24
6. FIBRE CABLE NUMBERS USED ON THIS DRG. ARE F1 & F2.
7. WIRE NUMBERS OTHER THAN ABOVE ARE DERIVED FROM OTHER SHEETS.
8. LAST FUSE NUMBER USED F51. LAST RELAY NUMBER USED R26.
9. ALL CABLES TO BE IN ACCORDANCE WITH SMD DRG.No.PD0739 (LATEST ISSUE No 3)
   RED CABLE = 240V DC POWER
10. FUSE TYPE IS DENOTED BY THE FOLLOWING REFERENCES-
    S - AC SELF-RESETTING FUSE (AA9038-5A.FUSE+AA9039-7A.FUSE+PB6471-HOLDER)
    R - SELF-RESETTING FUSE (PB6471-HOLDER)
    A - AUTOMOBILE FUSE (PK3834-20A.FUSE + PK3777-HOLDER)
11. 24VDC RELAYS R1-R21, R24-R26 ARE PART Nos PG3465 (RELAY), PG3466 (BASE).
12. 24V DC RELAYS R23, R23 ARE PART No. AC2374.
13. TIMING RELAY TO BE SET-UP AS FOLLOWS-
    SIDE SWITCH = 24V.
    TOP SWITCH = 0.5
    MIDDLE SWITCH = 10 S
    BOTTOM SWITCH = 20 wt
14. LIM UNITS TO BE SET-UP AS FOLLOWS-

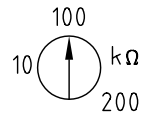

WITH FAULT MEMORY
ALARM RELAY IN N.E. (NORMALLY ENERGISED MODE)

15. OPTO ISOLATOR TO BE SET UP AS FOLLOWS: -

    LINK 1 OUT
    LINK 2 IN
    LINK 3 OUT

16. FIBRE OPTIC GYRO TO BE SET UP AS FOLLOWS: -
    MODE SWITCH (ROTARY) SET TO 4
    INTERNAL DIP SWITCH SET TO
    1=ON, 2=ON, 3=ON, 4=ON
17. MUX SLOT F CH1 - SET DIP SWITCHES TO 422

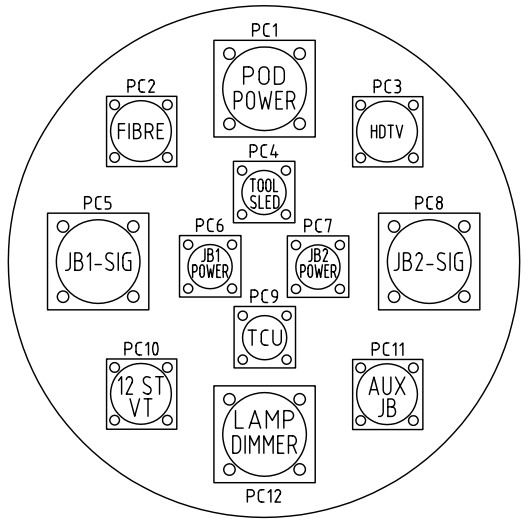

NO.	DATE	CHANGE	DRAWN	CHECK
1	09-01-08	AS BUILT.	P.S.	C.L.T.
2	28-04-08	NOTES MODIFIED, RE-NUMBERED & NEW NOTE 12 ADDED.	P.S.	C.L.T.
3	07-07-08	NOTE 3 AMENDED.	P.S.	C.L.T.

MATERIAL	DIMENSIONS	SCALE	PROJECTION 3RD
-	-	-	

DESIGNED	DRAWN	DATE	CHECKED
C.L.T.	C.L.T.	10-08-07	I.M.P.

TOLERANCES UNLESS OTHERWISE STATED				
DIMENSION mm	UP TO 100	100 TO 300	300 TO 1000	OVER 1000
FABRICATION	± 1.0	± 1.5	± 2.0	± 3.0
MACHINED PART	± 0.15	± 0.4	± 0.8	± 1.0

TITLE

POD WIRING - C903RV

(FRONT SHEET)

DO NOT SCALE

DRAWING NO. AB6315

ISSUE NO. 3

SHEET 1 OF 20

Soil Machine Dynamics

A3 CAD

ALL INTELLECTUAL PROPERTY RIGHTS SUBSISTING IN THESE DESIGNS ARE THE PROPERTY OF SOIL MACHINE DYNAMICS LTD. NO COPY IS TO BE MADE WITHOUT THE WRITTEN PERMISSION OF SOIL MACHINE DYNAMICS LTD. ANY PATENT APPLICATIONS, PATENTS AND/OR DESIGN APPLICATIONS, REGISTERED DESIGNS, DESIGN RIGHTS OR COPYRIGHT ARISING FROM OR CONTAINED IN THE DESIGNS ARE THE PROPERTY OF SOIL MACHINE DYNAMICS LTD AND ALL INFORMATION MUST BE HELD IN THE STRICTEST CONFIDENCE.

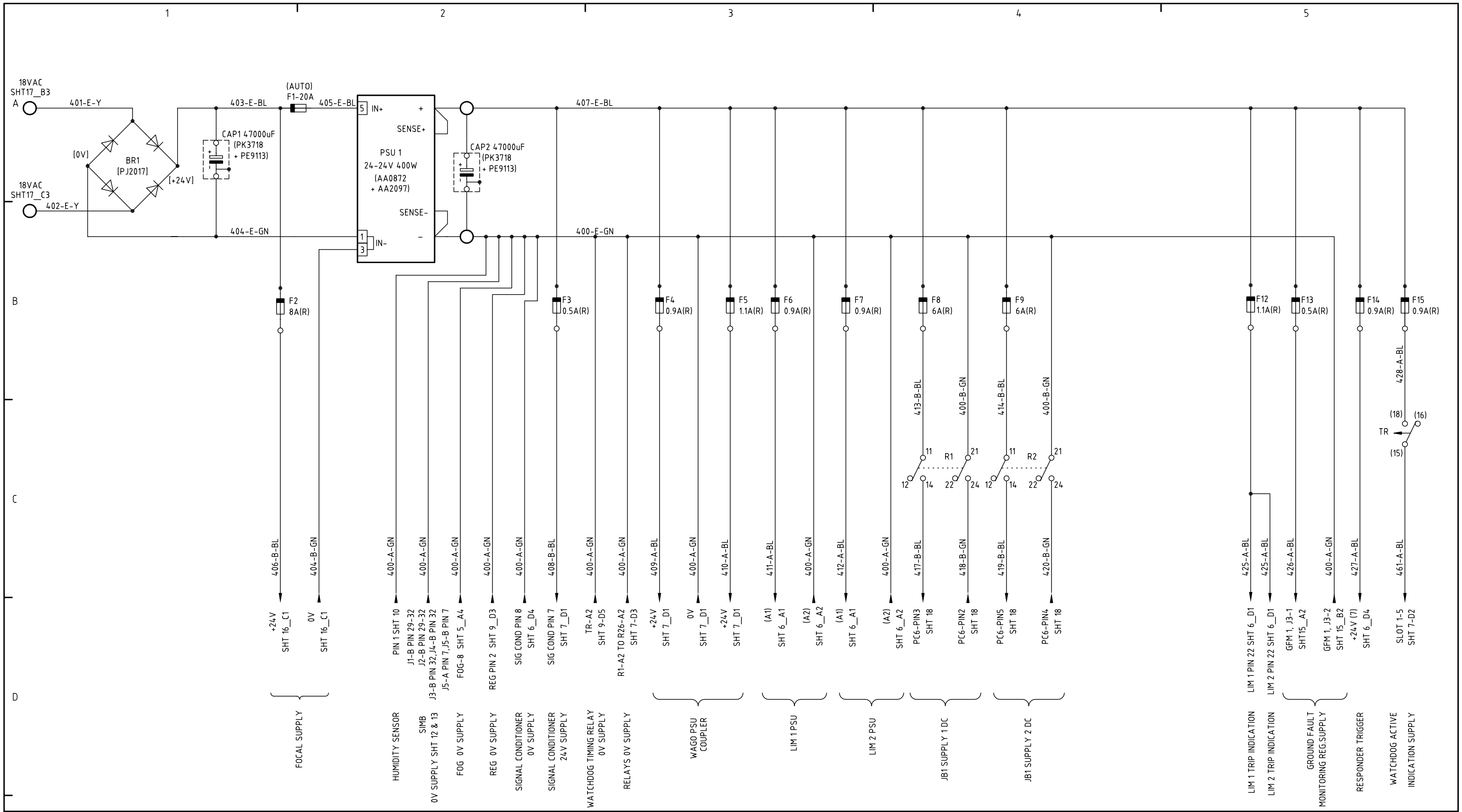

NO.	DATE	CHANGE	DRAWN	CHECK
1	09-01-08	AS BUILT.	P.S.	C.L.T.
2	28-04-08	NO CHANGE TO THIS SHEET.	P.S.	C.L.T.
3	07-07-08	JB2 SUPPLIES 1 & 2 MOVED TO SHEET 3.	P.S.	C.L.T.

MATERIAL	DIMENSIONS	SCALE	PROJECTION 3RD
–	–	–	

DESIGNED	DRAWN	DATE	CHECKED
C.L.T.	C.L.T.	10-08-07	I.M.P.

TOLERANCES UNLESS OTHERWISE STATED

DIMENSION mm	UP TO 100	100 TO 300	300 TO 1000	OVER 1000
FABRICATION	± 1.0	± 1.5	± 2.0	± 3.0
MACHINED PART	± 0.15	± 0.4	± 0.8	± 1.0

TITLE

POD WIRING - C903RV

(24V REGULATED PSU's)

DO NOT SCALE

DRAWING NO. AB6315

ISSUE NO. 3

SHEET 2 OF 20

Soil Machine Dynamics

A3 CAD

ALL INTELLECTUAL PROPERTY RIGHTS SUBSISTING IN THESE DESIGNS ARE THE PROPERTY OF SOIL MACHINE DYNAMICS LTD. NO COPY IS TO BE MADE WITHOUT THE WRITTEN PERMISSION OF SOIL MACHINE DYNAMICS LTD. ANY PATENT APPLICATIONS, PATENTS AND/OR DESIGN APPLICATIONS, REGISTERED DESIGNS, DESIGN RIGHTS OR COPYRIGHT ARISING FROM OR CONTAINED IN THE DESIGNS ARE THE PROPERTY OF SOIL MACHINE DYNAMICS LTD AND ALL INFORMATION MUST BE HELD IN THE STRICTEST CONFIDENCE.

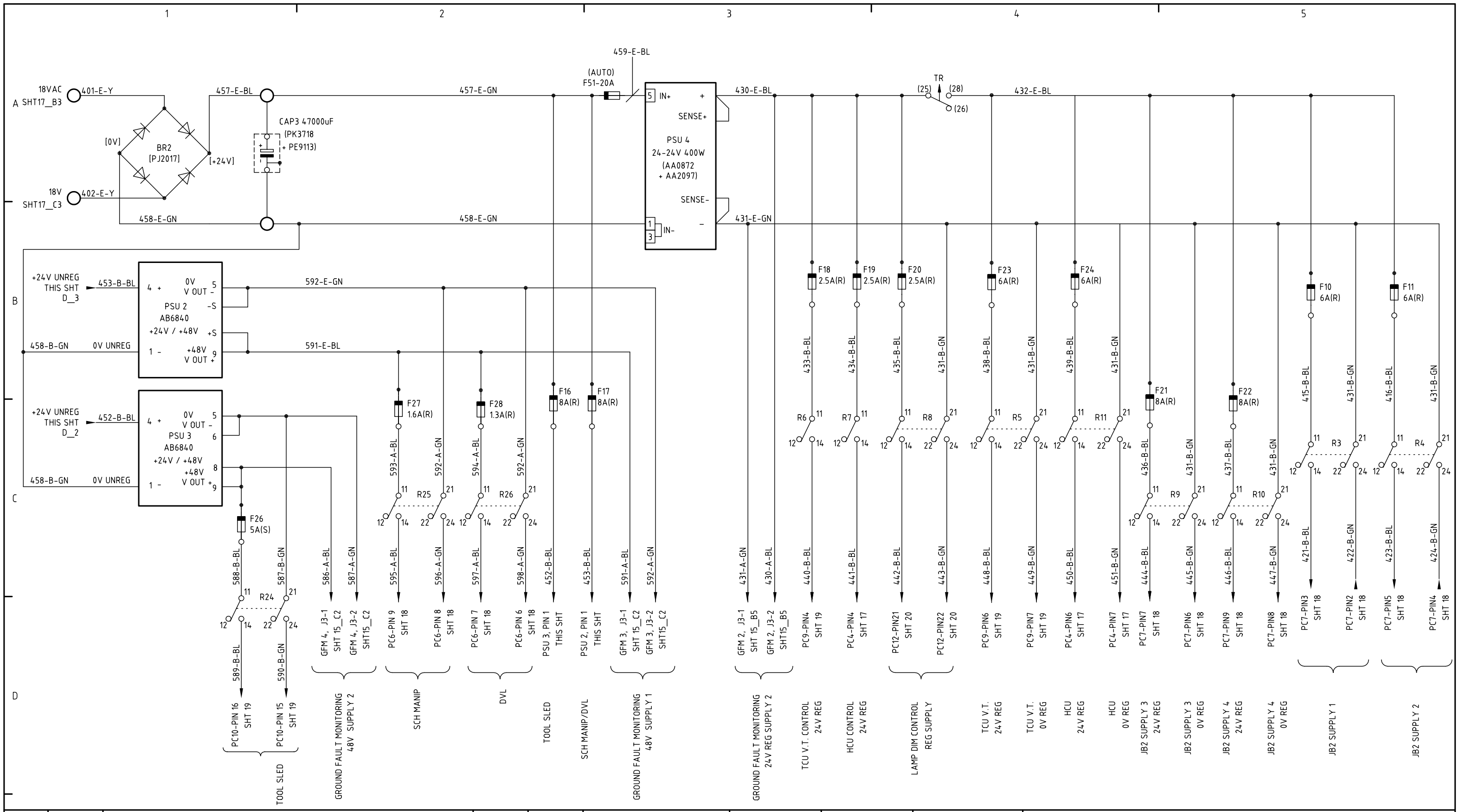

NO.	DATE	CHANGE	DRAWN	CHECK
1	09-01-08	AS BUILT.	P.S.	C.L.T.
2	28-04-08	PSU 4 ADDED & CABLING RE-ARRANGED, CABLES 458 & 459 ADDED.	P.S.	C.L.T.
3	07-07-08	GROUND FAULT MONITORING DELETED, CIRCUIT CHANGES.	P.S.	C.L.T.

MATERIAL: -

DIMENSIONS: -

SCALE: -

PROJECTION 3RD

DESIGNED: C.L.T.

DRAWN: C.L.T.

DATE: 10-08-07

CHECKED: I.M.P.

TOLERANCES UNLESS OTHERWISE STATED

DIMENSION mm	UP TO 100	100 TO 300	300 TO 1000	OVER 1000
FABRICATION	± 1.0	± 1.5	± 2.0	± 3.0
MACHINED PART	± 0.15	± 0.4	± 0.8	± 1.0

TITLE

POD WIRING - C903RV

(24V.UNREGULATED PSU's & 48v REG PSU)

DO NOT SCALE

DRAWING NO. AB6315

ISSUE NO. 3

SHEET 3 OF 20

ALL INTELLECTUAL PROPERTY RIGHTS SUBSISTING IN THESE DESIGNS ARE THE PROPERTY OF SOIL MACHINE DYNAMICS LTD. NO COPY IS TO BE MADE WITHOUT THE WRITTEN PERMISSION OF SOIL MACHINE DYNAMICS LTD. ANY PATENT APPLICATIONS, PATENTS AND/OR DESIGN APPLICATIONS, REGISTERED DESIGNS, DESIGN RIGHTS OR COPYRIGHT ARISING FROM OR CONTAINED IN THE DESIGNS ARE THE PROPERTY OF SOIL MACHINE DYNAMICS LTD AND ALL INFORMATION MUST BE HELD IN THE STRICTEST CONFIDENCE.

Soil Machine Dynamics

A3 CAD

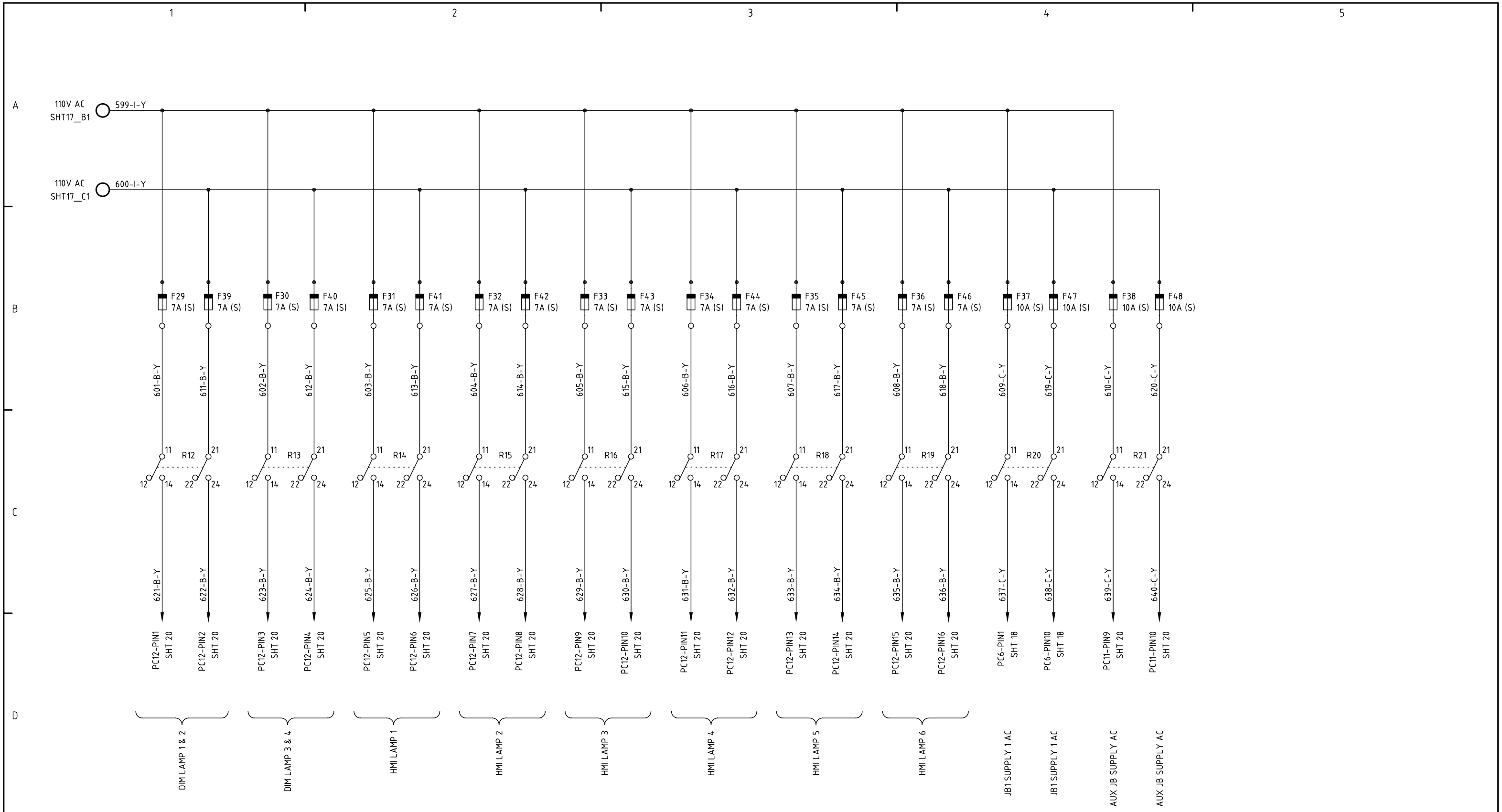

NO.	DATE	CHANGE	DRAWN	CHECK
1	09-01-08	AS BUILT.	P.S.	C.L.T.
2	28-04-08	NO CHANGE TO THIS SHEET.	P.S.	C.L.T.
3	07-07-08	NO CHANGE TO THIS SHEET.	P.S.	C.L.T.

MATERIAL: –

DIMENSIONS: –

SCALE: –

PROJECTION 3RD

DESIGNED: C.L.T.

DRAWN: C.L.T.

DATE: 10-08-07

CHECKED: I.M.P.

TOLERANCES UNLESS OTHERWISE STATED

DIMENSION mm	UP TO 100	100 TO 300	300 TO 1000	OVER 1000
FABRICATION	± 1.0	± 1.5	± 2.0	± 3.0
MACHINED PART	± 0.15	± 0.4	± 0.8	± 1.0

TITLE

POD WIRING – C903RV

(110V.DISTRIBUTION)

DO NOT SCALE

DRAWING NO. AB6315

ISSUE NO. 3

SHEET 4 OF 20

Soil Machine Dynamics

A3 CAD

ALL INTELLECTUAL PROPERTY RIGHTS SUBSISTING IN THESE DESIGNS ARE THE PROPERTY OF SOIL MACHINE DYNAMICS LTD. NO COPY IS TO BE MADE WITHOUT THE WRITTEN PERMISSION OF SOIL MACHINE DYNAMICS LTD. ANY PATENT APPLICATIONS, PATENTS AND/OR DESIGN APPLICATIONS, REGISTERED DESIGNS, DESIGN RIGHTS OR COPYRIGHT ARISING FROM OR CONTAINED IN THE DESIGNS ARE THE PROPERTY OF SOIL MACHINE DYNAMICS LTD AND ALL INFORMATION MUST BE HELD IN THE STRICTEST CONFIDENCE.

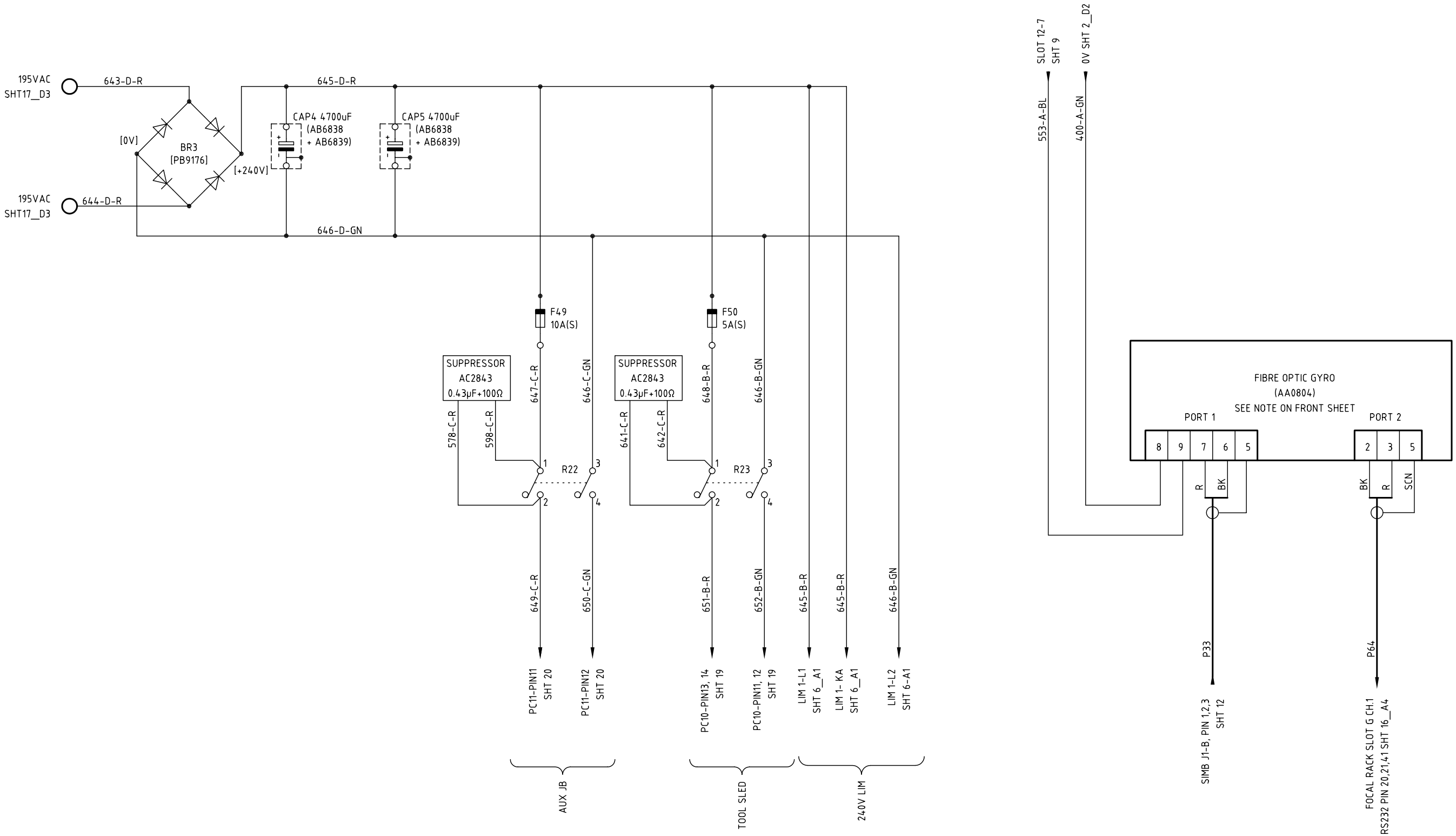

NO.	DATE	CHANGE	DRAWN	CHECK
1	09-01-08	AS BUILT.	P.S.	C.L.T.
2	28-04-08	CHANGE TO RELAY REFERENCES.	P.S.	C.L.T.
3	07-07-08	2 x SUPPRESSORS ADDED.	P.S.	C.L.T.

MATERIAL	DIMENSIONS	SCALE	PROJECTION 3RD
–	–	–	

DESIGNED	DRAWN
C.L.T.	C.L.T.
DATE	CHECKED
10-08-07	I.M.P.

TOLERANCES UNLESS OTHERWISE STATED

DIMENSION mm	UP TO 100	100 TO 300	300 TO 1000	OVER 1000
FABRICATION	± 1.0	± 1.5	± 2.0	± 3.0
MACHINED PART	± 0.15	± 0.4	± 0.8	± 1.0

TITLE

POD WIRING - C903RV

(240 V DISTRIBUTION / GYRO CARD)

DO NOT SCALE

DRAWING NO. AB6315

ISSUE NO. 3

SHEET 5 OF 20

Soil Machine Dynamics

A3 CAD

ALL INTELLECTUAL PROPERTY RIGHTS SUBSISTING IN THESE DESIGNS ARE THE PROPERTY OF SOIL MACHINE DYNAMICS LTD. NO COPY IS TO BE MADE WITHOUT THE WRITTEN PERMISSION OF SOIL MACHINE DYNAMICS LTD. ANY PATENT APPLICATIONS, PATENTS AND/OR DESIGN APPLICATIONS, REGISTERED DESIGNS, DESIGN RIGHTS OR COPYRIGHT ARISING FROM OR CONTAINED IN THE DESIGNS ARE THE PROPERTY OF SOIL MACHINE DYNAMICS LTD AND ALL INFORMATION MUST BE HELD IN THE STRICTEST CONFIDENCE.

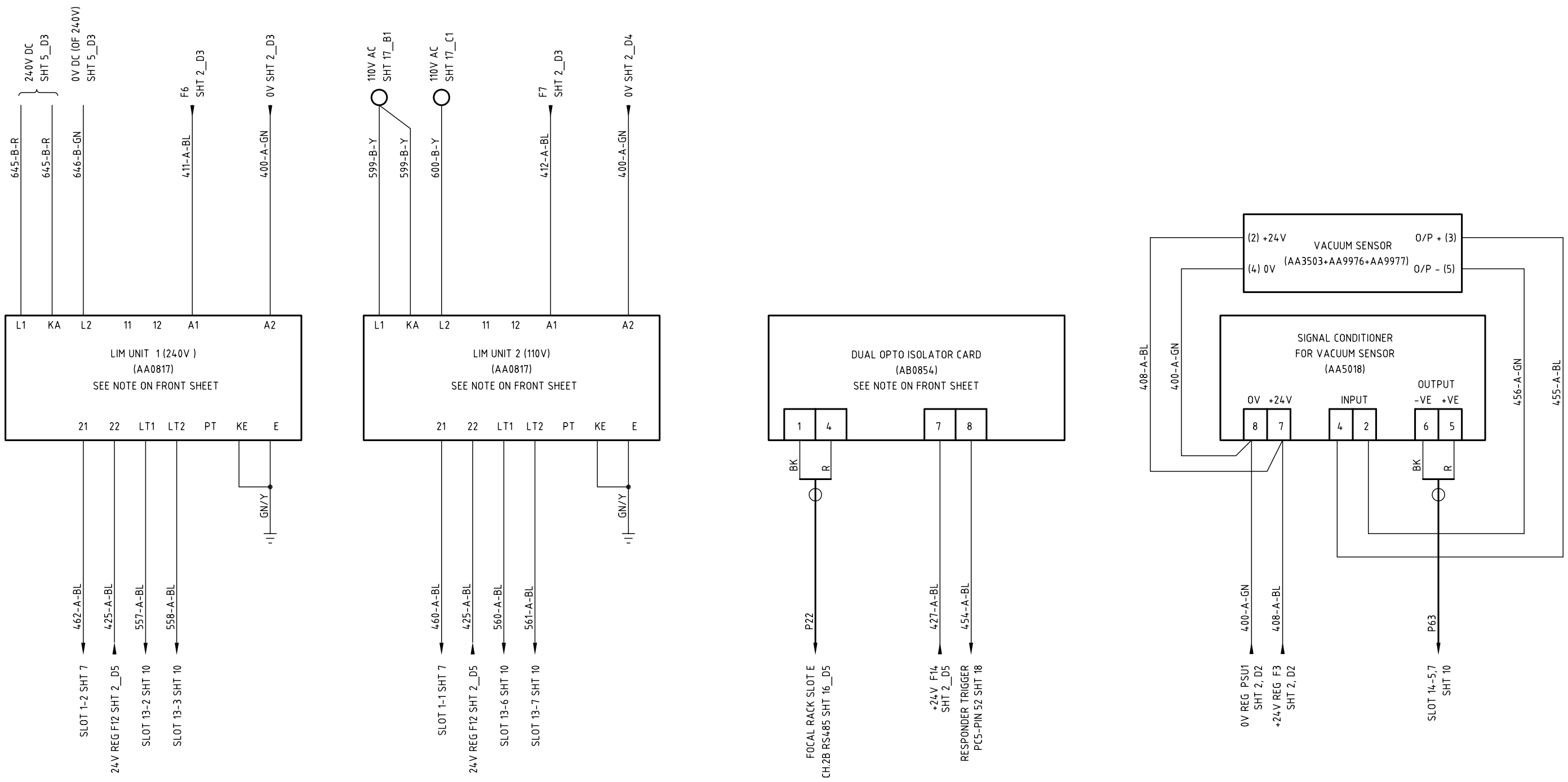

NO.	DATE	CHANGE	DRAWN	CHECK
1	09-01-07	AS BUILT.	P.S.	C.L.T.
2	28-04-08	NO CHANGE TO THIS SHEET.	P.S.	C.L.T.
3	07-07-08	NO CHANGE TO THIS SHEET.	P.S.	C.L.T.

MATERIAL: –

DIMENSIONS: –

SCALE: –

PROJECTION 3RD

DESIGNED: C.L.T.

DRAWN: C.L.T.

DATE: 10-08-07

CHECKED: I.M.P.

TOLERANCES UNLESS OTHERWISE STATED

DIMENSION mm	UP TO 100	100 TO 300	300 TO 1000	OVER 1000
FABRICATION	± 1.0	± 1.5	± 2.0	± 3.0
MACHINED PART	± 0.15	± 0.4	± 0.8	± 1.0

TITLE

POD WIRING - C903RV

(LIM, VACUUM & TRIGGER CARDS)

DO NOT SCALE

DRAWING NO. AB6315

ISSUE NO. 3

SHEET 6 OF 20

ALL INTELLECTUAL PROPERTY RIGHTS SUBSISTING IN THESE DESIGNS ARE THE PROPERTY OF SOIL MACHINE DYNAMICS LTD. NO COPY IS TO BE MADE WITHOUT THE WRITTEN PERMISSION OF SOIL MACHINE DYNAMICS LTD. ANY PATENT APPLICATIONS, PATENTS AND/OR DESIGN APPLICATIONS, REGISTERED DESIGNS, DESIGN RIGHTS OR COPYRIGHT ARISING FROM OR CONTAINED IN THE DESIGNS ARE THE PROPERTY OF SOIL MACHINE DYNAMICS LTD AND ALL INFORMATION MUST BE HELD IN THE STRICTEST CONFIDENCE.

Soil Machine Dynamics

A3 CAD

DI1. 110V LIM
DI2. WATCH DOG TRIP
DI3. 240V LIM
DI4. SPARE
DI5. SPARE
DI6. SPARE
DI7. SPARE
DI8. SPARE

DO1. JB1 SUPPLY 1 PWR ISOLATE
DO2. JB1 SUPPLY 2 PWR ISOLATE
DO3. JB2 SUPPLY 1 PWR ISOLATE
DO4. JB2 SUPPLY 2 PWR ISOLATE
DO5. ± 12V / TCU PWR ISOLATE
DO6. TCU PWR ISOLATE
DO7. HCU PWR ISOLATE
DO8. LAMP DIMMER PWR ISOLATE

DO1. JB2 SUPPLY 3 PWR ISOLATE
DO2. JB2 SUPPLY 4 PWR ISOLATE
DO3. HCU PWR ISOLATE
DO4. LAMP 1&2 PWR ISOLATE
DO5. LAMP 3&4 PWR ISOLATE
DO6. HMI LAMP 1 PWR ISOLATE
DO7. HMI LAMP 2 PWR ISOLATE
DO8. HMI LAMP 3 PWR ISOLATE

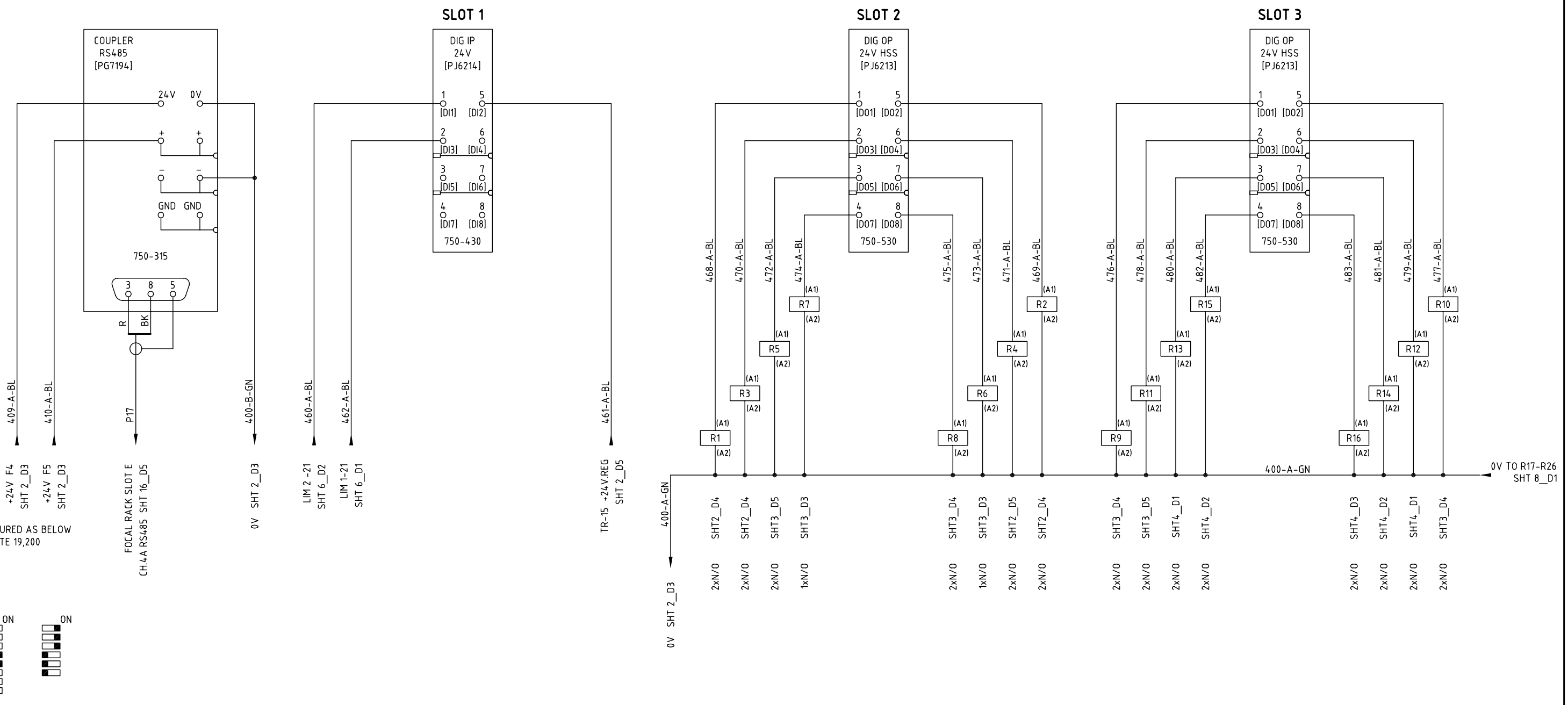

NO.	DATE	CHANGE	DRAWN	CHECK
1	09-01-08	AS BUILT.	P.S.	C.L.T.
2	28-04-08	NO CHANGE TO THIS SHEET.	P.S.	C.L.T.
3	07-07-08	NO CHANGE TO THIS SHEET.	P.S.	C.L.T.

MATERIAL: -
DIMENSIONS: -
SCALE: -
PROJECTION 3RD

DESIGNED: C.L.T.
DRAWN: C.L.T.
DATE: 10-08-07
CHECKED: I.M.P.

TOLERANCES UNLESS OTHERWISE STATED

DIMENSION mm	UP TO 100	100 TO 300	300 TO 1000	OVER 1000
FABRICATION	± 1.0	± 1.5	± 2.0	± 3.0
MACHINED PART	± 0.15	± 0.4	± 0.8	± 1.0

TITLE

POD WIRING - C903RV

(WAGO MODULES - DIGITAL INPUTS / OUTPUTS)

DO NOT SCALE

DRAWING NO. AB6315

ISSUE NO. 3

SHEET 7 OF 20

Soil Machine Dynamics

A3 CAD

ALL INTELLECTUAL PROPERTY RIGHTS SUBSISTING IN THESE DESIGNS ARE THE PROPERTY OF SOIL MACHINE DYNAMICS LTD. NO COPY IS TO BE MADE WITHOUT THE WRITTEN PERMISSION OF SOIL MACHINE DYNAMICS LTD. ANY PATENT APPLICATIONS, PATENTS AND/OR DESIGN APPLICATIONS, REGISTERED DESIGNS, DESIGN RIGHTS OR COPYRIGHT ARISING FROM OR CONTAINED IN THE DESIGNS ARE THE PROPERTY OF SOIL MACHINE DYNAMICS LTD AND ALL INFORMATION MUST BE HELD IN THE STRICTEST CONFIDENCE.

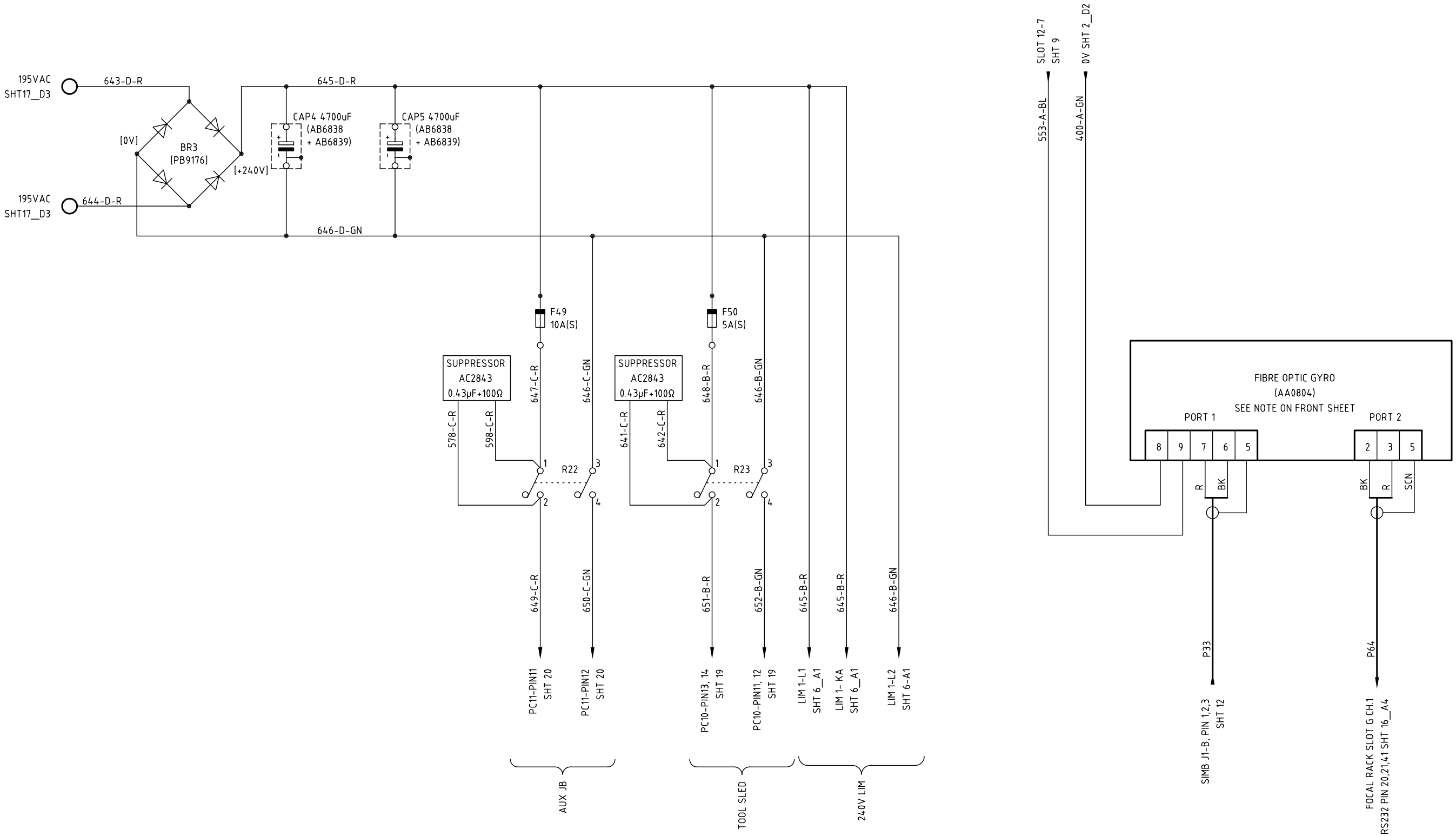

NO.	DATE	CHANGE	DRAWN	CHECK
1	09-01-08	AS BUILT.	P.S.	C.L.T.
2	28-04-08	CHANGE TO RELAY REFERENCES.	P.S.	C.L.T.
3	07-07-08	2 x SUPPRESSORS ADDED.	P.S.	C.L.T.

MATERIAL	DIMENSIONS	SCALE	PROJECTION 3RD
–	–	–	

DESIGNED	DRAWN
C.L.T.	C.L.T.
DATE	CHECKED
10-08-07	I.M.P.

TOLERANCES UNLESS OTHERWISE STATED

DIMENSION mm	UP TO 100	100 TO 300	300 TO 1000	OVER 1000
FABRICATION	± 1.0	± 1.5	± 2.0	± 3.0
MACHINED PART	± 0.15	± 0.4	± 0.8	± 1.0

TITLE

POD WIRING - C903RV

(240 V DISTRIBUTION / GYRO CARD)

DO NOT SCALE

DRAWING NO. AB6315

ISSUE NO. 3

SHEET 5 OF 20

Soil Machine Dynamics

A3 CAD

ALL INTELLECTUAL PROPERTY RIGHTS SUBSISTING IN THESE DESIGNS ARE THE PROPERTY OF SOIL MACHINE DYNAMICS LTD. NO COPY IS TO BE MADE WITHOUT THE WRITTEN PERMISSION OF SOIL MACHINE DYNAMICS LTD. ANY PATENT APPLICATIONS, PATENTS AND/OR DESIGN APPLICATIONS, REGISTERED DESIGNS, DESIGN RIGHTS OR COPYRIGHT ARISING FROM OR CONTAINED IN THE DESIGNS ARE THE PROPERTY OF SOIL MACHINE DYNAMICS LTD AND ALL INFORMATION MUST BE HELD IN THE STRICTEST CONFIDENCE.

1 2 3 4 5

A

DO1. JB1 WAGO SIGNAL ISOLATE
DO2. JB2 WAGO SIGNAL ISOLATE
DO3. TCU SIGNAL ISOLATE
DO4. HCU SIGNAL ISOLATE
DO5. LAMP DMMER SIGNAL ISOLATE
DO6. SPARE 485, 1 SIGNAL ISOLATE
DO7. SPARE 485, 2 SIGNAL ISOLATE
DO8. P&T-10 SIGNAL ISOLATE

DO1. P&T-25 SIGNAL ISOLATE
DO2. DIGI STILL CAM SIGNAL ISOLATE
DO3. AUX JB 1 SIGNAL ISOLATE
DO4. AUX JB 2 SIGNAL ISOLATE
DO5. SPARE 485 1 SIGNAL ISOLATE
DO6. TOOL SLED 422, 1 SIGNAL ISOLATE
DO7. TOOL SLED 422, 2 SIGNAL ISOLATE
DO8. ETHERNET SIGNAL ISOLATE A

DO1. ETHERNET SIGNAL ISOLATE B
DO2. PILOT CAM SIGNAL ISOLATE 1
DO3. PILOT CAM SIGNAL ISOLATE 2
DO4. PILOT CAM SIGNAL ISOLATE 3
DO5. DIGI STILL CAM SIGNAL ISOLATE
DO6. INT P&T CAM SIGNAL ISOLATE
DO7. AUX CAM 1 SIGNAL ISOLATE
DO8. UMB CAM SIGNAL ISOLATE

DO1. AUX CAM 2 SIGNAL ISOLATE
DO2. TOOL SLED 1 SIGNAL ISOLATE
DO3. AUX CAM 3 SIGNAL ISOLATE
DO4. TOOL SLED 2 SIGNAL ISOLATE
DO5. AUX CAM 4 SIGNAL ISOLATE
DO6. GFM - +24V REG PSU 1
DO7. GFM - 0V REG PSU 1
DO8. GFM - +24V REG PSU 4

DO1. GFM - 0V REG PSU 4
DO2. GFM - +48V REG PSU 2
DO3. GFM - 0V (48VREG) PSU 2
DO4. GFM - +48V REG PSU 3
DO5. GFM - 0V (48VREG) PSU 3
DO6. FOG
DO7. WATCHDOG RESET
DO8. WATCHDOG

B

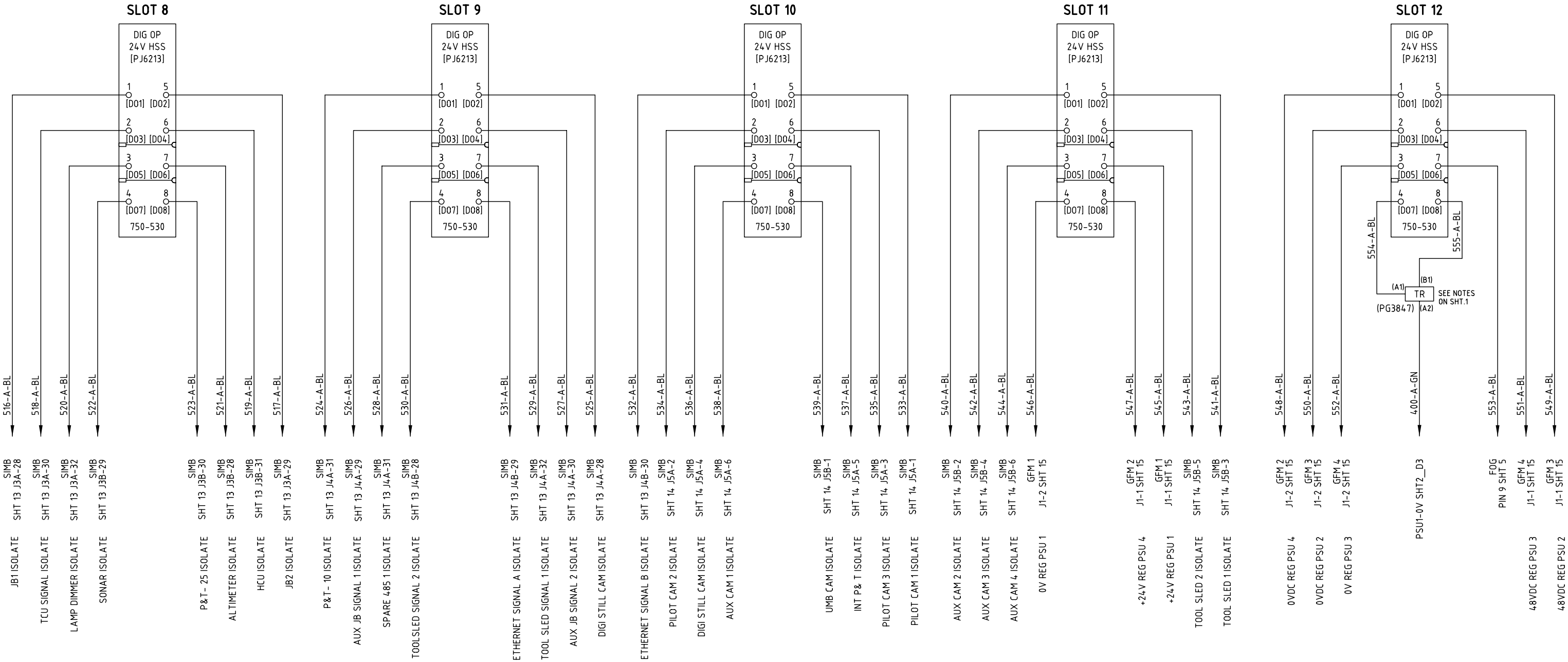

NO.	DATE	CHANGE	DRAWN	CHECK
1	09-01-08	AS BUILT.	P.S.	C.L.T.
2	28-04-08	NO CHANGE TO THIS SHEET.	P.S.	C.L.T.
3	07-07-08	WAGO's 10 - 12 CIRCUIT FUNCTIONS AMENDED.	P.S.	C.L.T.

MATERIAL: -
DIMENSIONS: -
SCALE: -
PROJECTION 3RD

DESIGNED: C.L.T.
DRAWN: C.L.T.
DATE: 10-08-07
CHECKED: I.M.P.

TOLERANCES UNLESS OTHERWISE STATED

DIMENSION mm	UP TO 100	100 TO 300	300 TO 1000	OVER 1000
FABRICATION	± 1.0	± 1.5	± 2.0	± 3.0
MACHINED PART	± 0.15	± 0.4	± 0.8	± 1.0

TITLE

POD WIRING - C903RV

(WAGO MODULES - DIGITAL OUTPUTS)

DO NOT SCALE

DRAWING NO. AB6315

ISSUE NO. 3

Soil Machine Dynamics

A3 CAD

SHEET 9 OF 20

ALL INTELLECTUAL PROPERTY RIGHTS SUBSISTING IN THESE DESIGNS ARE THE PROPERTY OF SOIL MACHINE DYNAMICS LTD. NO COPY IS TO BE MADE WITHOUT THE WRITTEN PERMISSION OF SOIL MACHINE DYNAMICS LTD. ANY PATENT APPLICATIONS, PATENTS AND/OR DESIGN APPLICATIONS, REGISTERED DESIGNS, DESIGN RIGHTS OR COPYRIGHT ARISING FROM OR CONTAINED IN THE DESIGNS ARE THE PROPERTY OF SOIL MACHINE DYNAMICS LTD AND ALL INFORMATION MUST BE HELD IN THE STRICTEST CONFIDENCE.

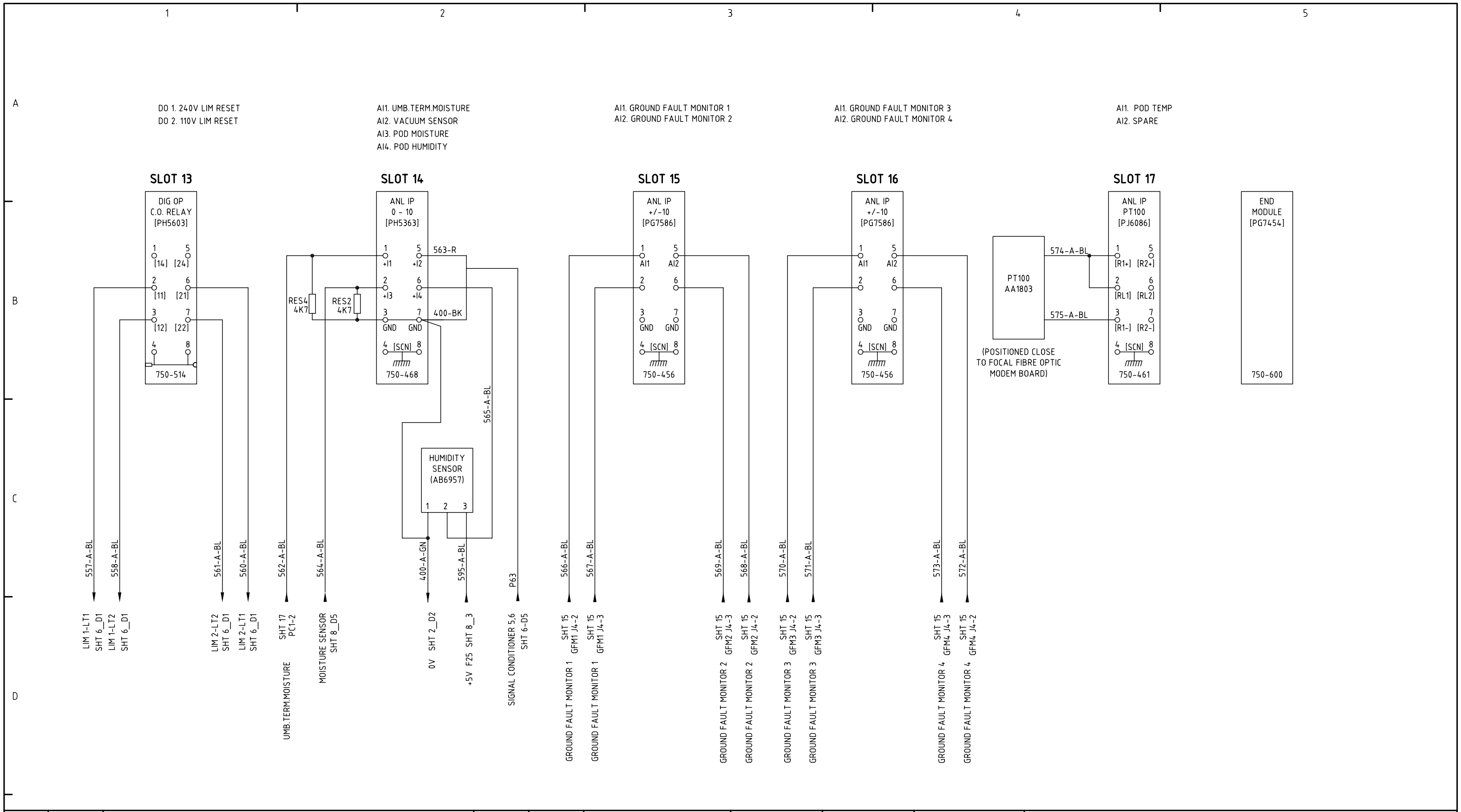

NO.	DATE	CHANGE	DRAWN	CHECK
1	09-01-08	AS BUILT.	P.S.	C.L.T.
2	28-04-08	NO CHANGE TO THIS SHEET.	P.S.	C.L.T.
3	07-07-08	SLOTS 15 & 16 WAGO TYPE's AMENDED.	P.S.	C.L.T.

MATERIAL	DIMENSIONS	SCALE	PROJECTION 3RD
-	-	-	

DESIGNED	DRAWN	DATE	CHECKED
C.L.T.	C.L.T.	10-08-07	I.M.P.

TOLERANCES UNLESS OTHERWISE STATED

DIMENSION mm	UP TO 100	100 TO 300	300 TO 1000	OVER 1000
FABRICATION	± 1.0	± 1.5	± 2.0	± 3.0
MACHINED PART	± 0.15	± 0.4	± 0.8	± 1.0

TITLE

POD WIRING - C903RV

(WAGO MODULES - C.O. RELAY / ANALOGUE I/P)

DO NOT SCALE

DRAWING NO. AB6315

ISSUE NO. 3

SHEET 10 OF 20

A3 CAD

ALL INTELLECTUAL PROPERTY RIGHTS SUBSISTING IN THESE DESIGNS ARE THE PROPERTY OF SOIL MACHINE DYNAMICS LTD. NO COPY IS TO BE MADE WITHOUT THE WRITTEN PERMISSION OF SOIL MACHINE DYNAMICS LTD. ANY PATENT APPLICATIONS, PATENTS AND/OR DESIGN APPLICATIONS, REGISTERED DESIGNS, DESIGN RIGHTS OR COPYRIGHT ARISING FROM OR CONTAINED IN THE DESIGNS ARE THE PROPERTY OF SOIL MACHINE DYNAMICS LTD AND ALL INFORMATION MUST BE HELD IN THE STRICTEST CONFIDENCE.

Soil Machine Dynamics

SIGNAL ISOLATION MOTHERBOARD (SIMB)

(AB7546)

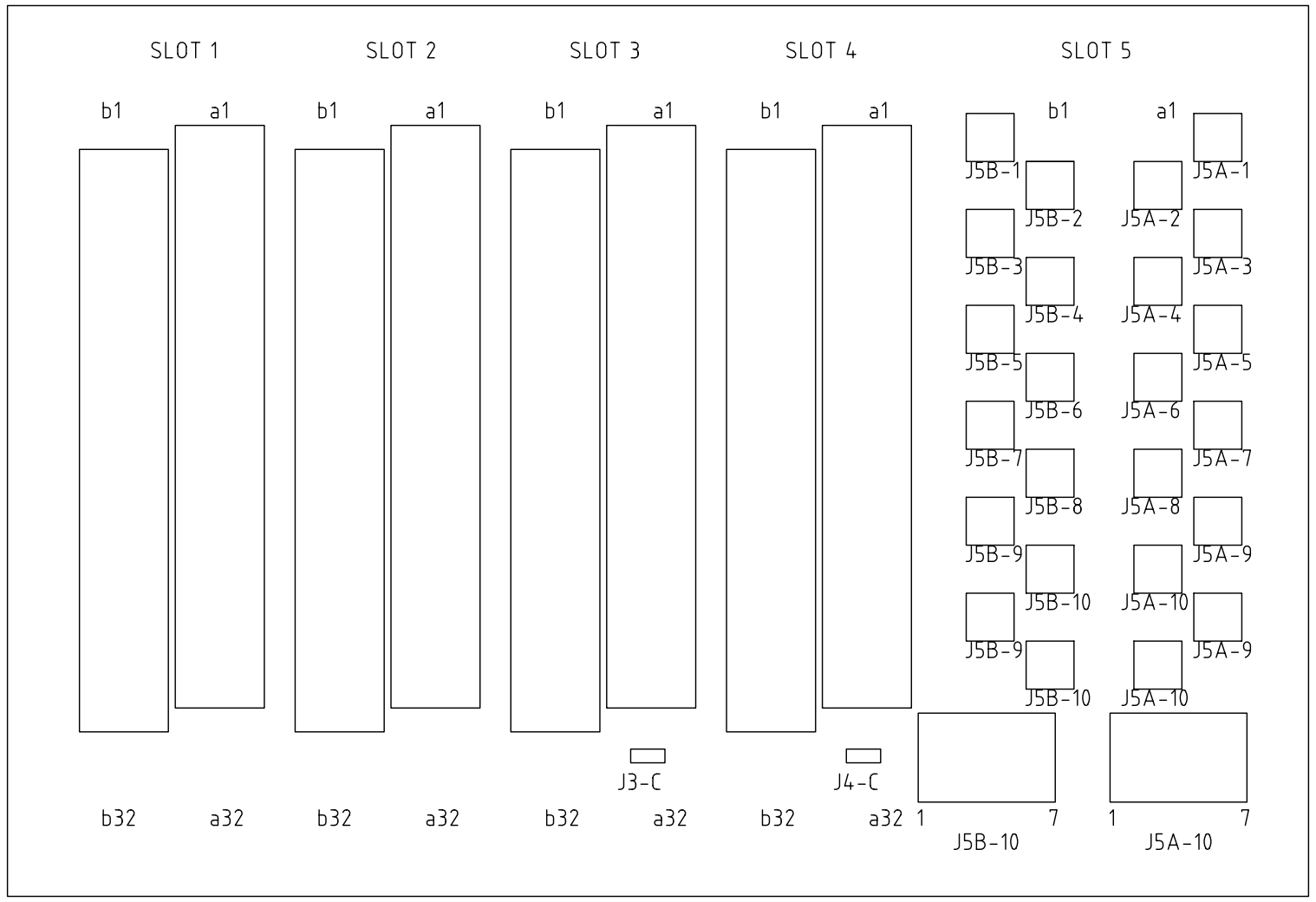

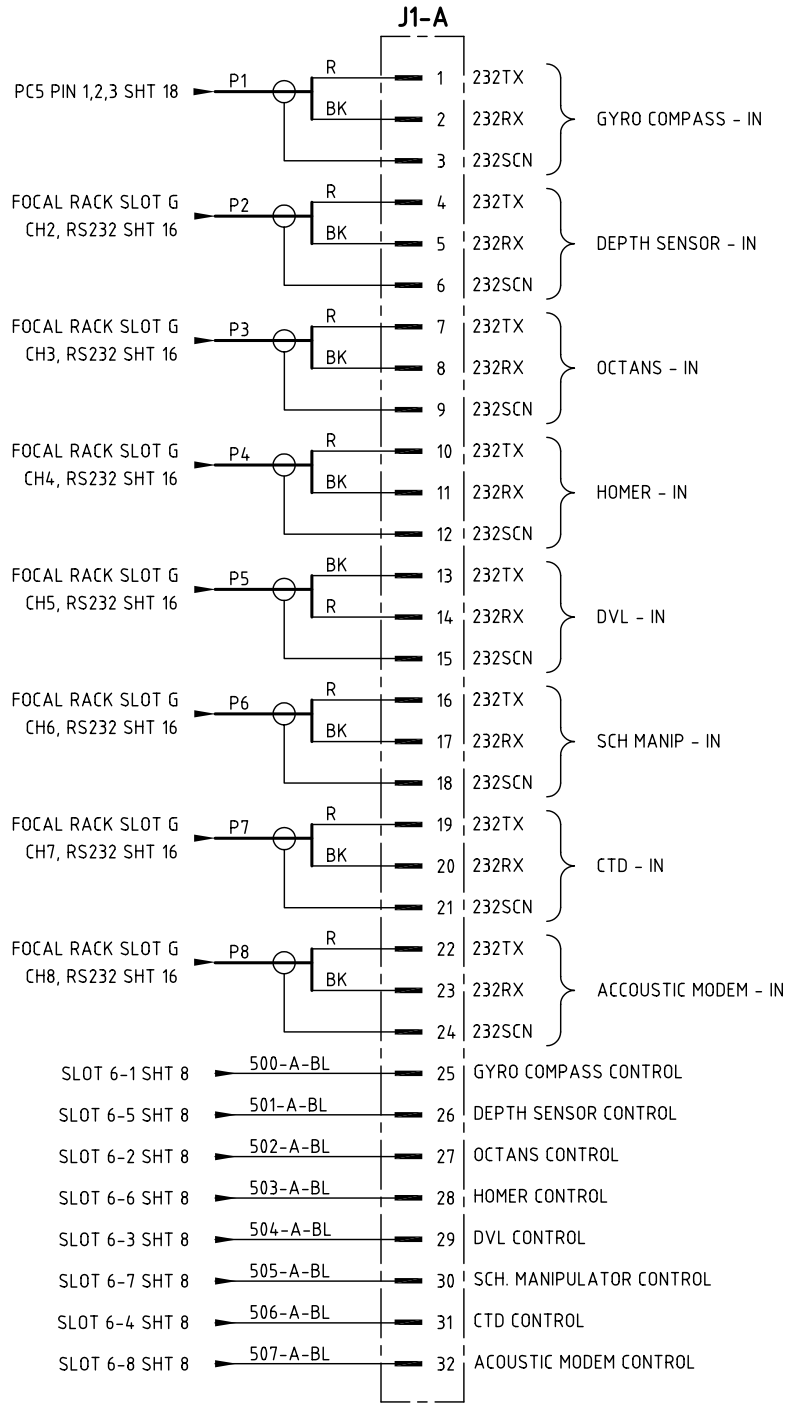

NO.	DATE	CHANGE	DRAWN	CHECK
1	09-01-08	AS BUILT.	P.S.	C.L.T.
2	28-04-08	NO CHANGE TO THIS SHEET.	P.S.	C.L.T.
3	07-07-08	CABLE P5 CORES AMENDED.	P.S.	C.L.T.

MATERIAL	DIMENSIONS	SCALE	PROJECTION 3RD
–	–	–	

DESIGNED	DRAWN
C.L.T.	C.L.T.
DATE	CHECKED
10-08-07	I.M.P.

TOLERANCES UNLESS OTHERWISE STATED

DIMENSION mm	UP TO 100	100 TO 300	300 TO 1000	OVER 1000
FABRICATION	± 1.0	± 1.5	± 2.0	± 3.0
MACHINED PART	± 0.15	± 0.4	± 0.8	± 1.0

TITLE

POD WIRING - C903RV

(SIGNALS ISOLATION BOARD)

DO NOT SCALE

DRAWING NO. AB6315

ISSUE NO. 3

SHEET 11 OF 20

Soil Machine Dynamics

A3 CAD

ALL INTELLECTUAL PROPERTY RIGHTS SUBSISTING IN THESE DESIGNS ARE THE PROPERTY OF SOIL MACHINE DYNAMICS LTD. NO COPY IS TO BE MADE WITHOUT THE WRITTEN PERMISSION OF SOIL MACHINE DYNAMICS LTD. ANY PATENT APPLICATIONS, PATENTS AND/OR DESIGN APPLICATIONS, REGISTERED DESIGNS, DESIGN RIGHTS OR COPYRIGHT ARISING FROM OR CONTAINED IN THE DESIGNS ARE THE PROPERTY OF SOIL MACHINE DYNAMICS LTD AND ALL INFORMATION MUST BE HELD IN THE STRICTEST CONFIDENCE.

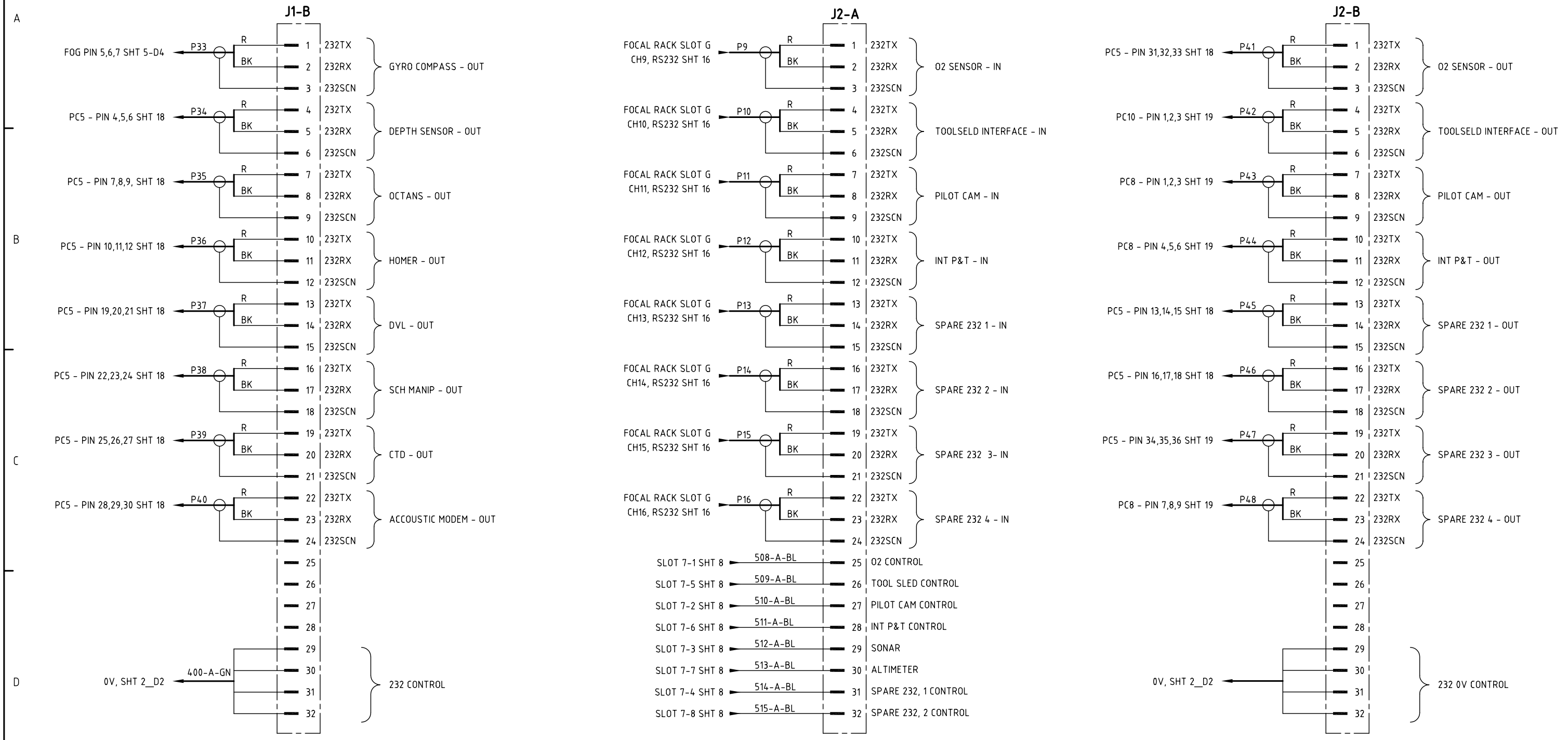

NO.	DATE	CHANGE	DRAWN	CHECK
1	09-01-08	AS BUILT.	P.S.	C.L.T.
2	28-04-08	NO CHANGE TO THIS SHEET.	P.S.	C.L.T.
3	07-07-08	J2-A & J2-B TERMINALS 13 - 24 FUNCTIONS AMENDED.	P.S.	C.L.T.

MATERIAL: -

DIMENSIONS: -

SCALE: -

PROJECTION 3RD

DESIGNED: C.L.T.

DRAWN: C.L.T.

DATE: 10-08-07

CHECKED: I.M.P.

TOLERANCES UNLESS OTHERWISE STATED

DIMENSION mm	UP TO 100	100 TO 300	300 TO 1000	OVER 1000
FABRICATION	± 1.0	± 1.5	± 2.0	± 3.0
MACHINED PART	± 0.15	± 0.4	± 0.8	± 1.0

TITLE

POD WIRING - C903RV

(SIGNALS ISOLATION BOARD)

DO NOT SCALE

DRAWING NO. AB6315

ISSUE NO. 3

SHEET 12 OF 20

ALL INTELLECTUAL PROPERTY RIGHTS SUBSISTING IN THESE DESIGNS ARE THE PROPERTY OF SOIL MACHINE DYNAMICS LTD. NO COPY IS TO BE MADE WITHOUT THE WRITTEN PERMISSION OF SOIL MACHINE DYNAMICS LTD. ANY PATENT APPLICATIONS, PATENTS AND/OR DESIGN APPLICATIONS, REGISTERED DESIGNS, DESIGN RIGHTS OR COPYRIGHT ARISING FROM OR CONTAINED IN THE DESIGNS ARE THE PROPERTY OF SOIL MACHINE DYNAMICS LTD AND ALL INFORMATION MUST BE HELD IN THE STRICTEST CONFIDENCE.

Soil Machine Dynamics

A3 CAD

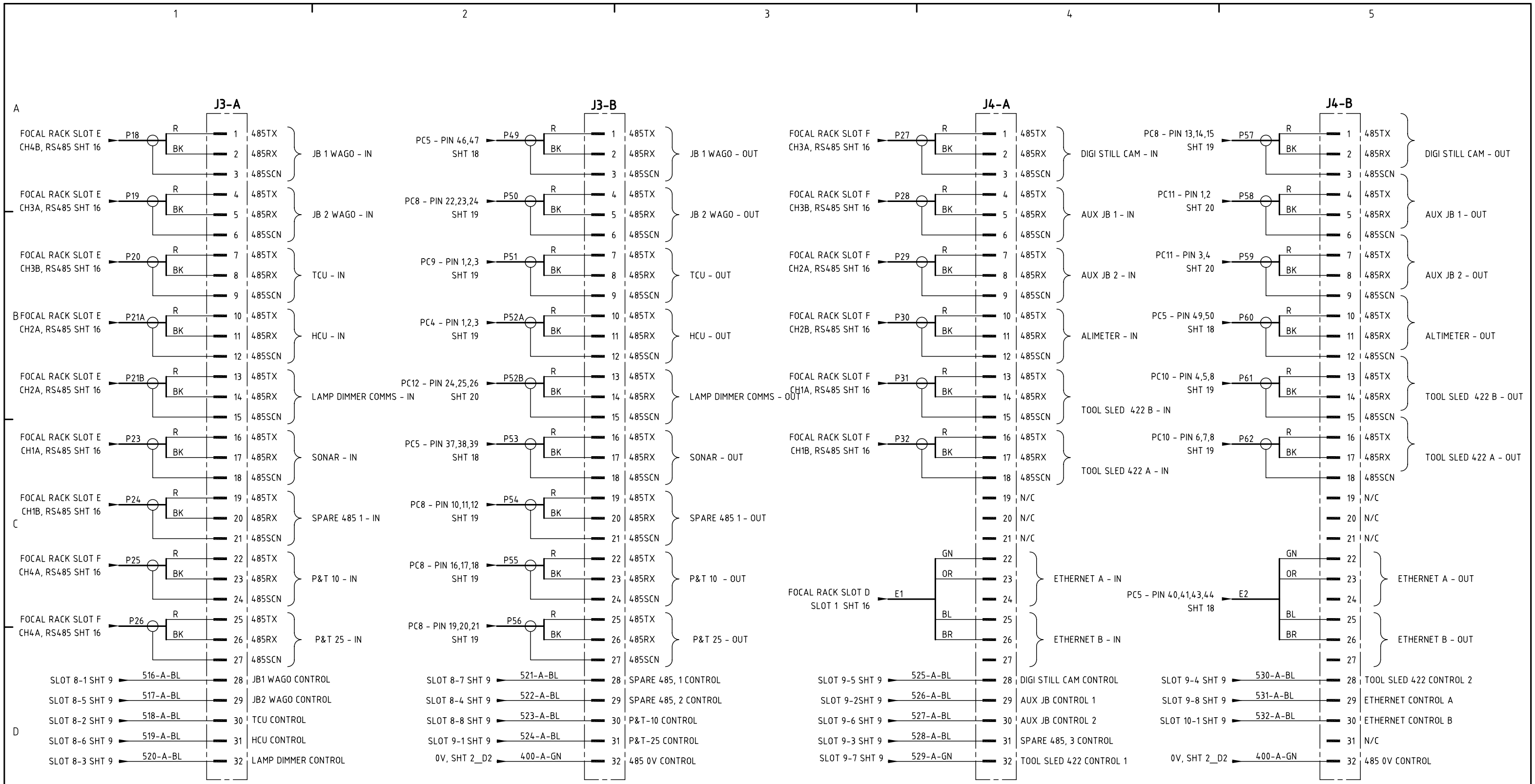

NO.	DATE	CHANGE	DRAWN	CHECK
1	09-01-08	AS BUILT.	P.S.	C.L.T.
2	28-04-08	NO CHANGE TO THIS SHEET.	P.S.	C.L.T.
3	07-07-08	J3-A & J3-B TERMINALS 16 - 20 FUNCTIONS AMENDED.	P.S.	C.L.T.

MATERIAL: -

DIMENSIONS: -

SCALE: -

PROJECTION 3RD

DESIGNED: C.L.T.

DRAWN: C.L.T.

DATE: 10-08-07

CHECKED: I.M.P.

TOLERANCES UNLESS OTHERWISE STATED

DIMENSION mm	UP TO 100	100 TO 300	300 TO 1000	OVER 1000
FABRICATION	± 1.0	± 1.5	± 2.0	± 3.0
MACHINED PART	± 0.15	± 0.4	± 0.8	± 1.0

TITLE

POD WIRING - C903RV

(SIGNALS ISOLATION BOARD)

DO NOT SCALE

DRAWING NO. AB6315

ISSUE NO. 3

SHEET 13 OF 20

Soil Machine Dynamics

A3 CAD

ALL INTELLECTUAL PROPERTY RIGHTS SUBSISTING IN THESE DESIGNS ARE THE PROPERTY OF SOIL MACHINE DYNAMICS LTD. NO COPY IS TO BE MADE WITHOUT THE WRITTEN PERMISSION OF SOIL MACHINE DYNAMICS LTD. ANY PATENT APPLICATIONS, PATENTS AND/OR DESIGN APPLICATIONS, REGISTERED DESIGNS, DESIGN RIGHTS OR COPYRIGHT ARISING FROM OR CONTAINED IN THE DESIGNS ARE THE PROPERTY OF SOIL MACHINE DYNAMICS LTD AND ALL INFORMATION MUST BE HELD IN THE STRICTEST CONFIDENCE.

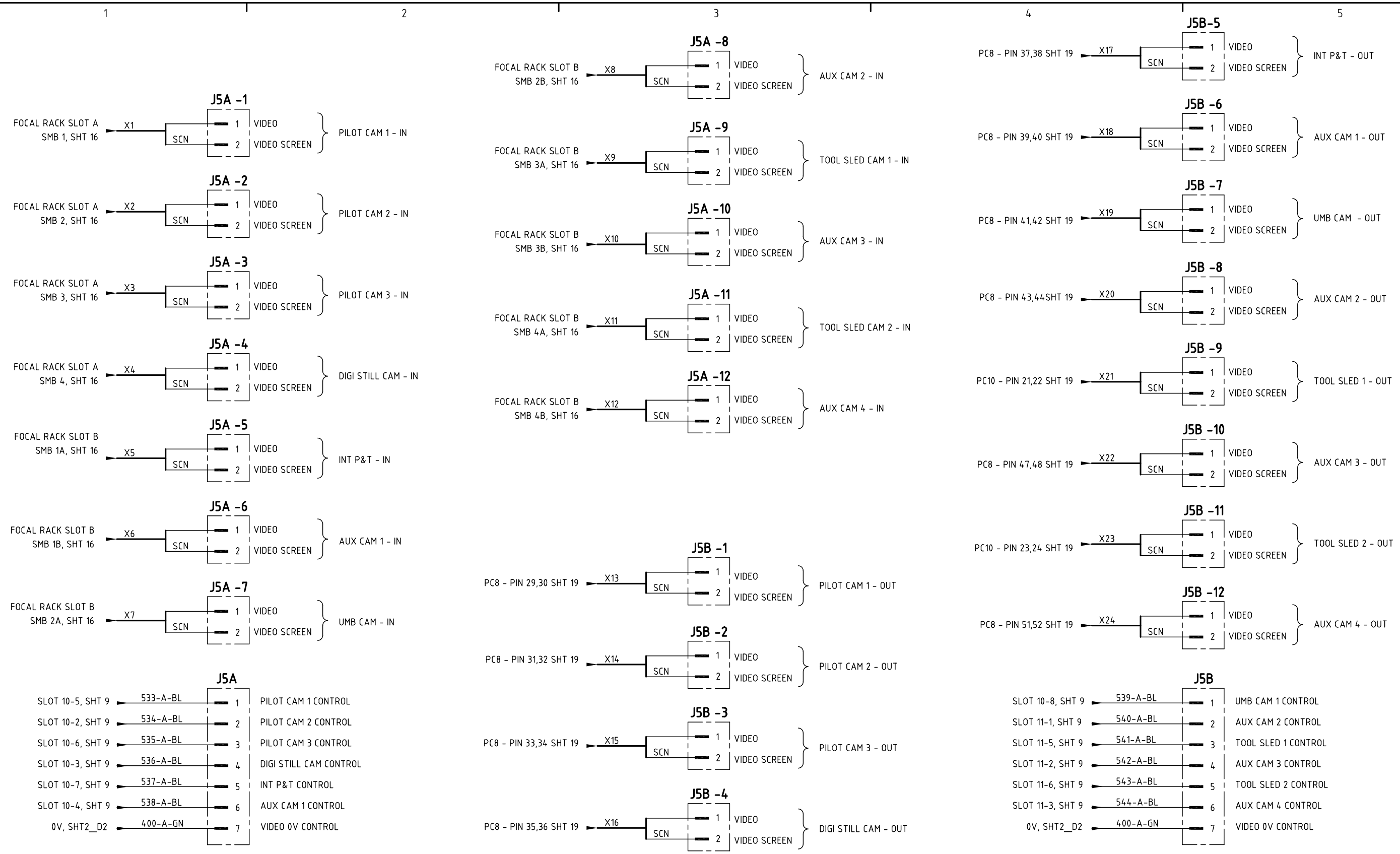

NO.	DATE	CHANGE	DRAWN	CHECK
1	09-01-08	AS BUILT.	P.S.	C.L.T.
2	28-04-08	NO CHANGE TO THIS SHEET.	P.S.	C.L.T.
3	07-07-08	J5A & J5B CIRCUIT FUNCTIONS AMENDED.	P.S.	C.L.T.

MATERIAL: -

DIMENSIONS: -

SCALE: -

PROJECTION 3RD

DESIGNED: C.L.T.

DRAWN: C.L.T.

DATE: 10-08-07

CHECKED: I.M.P.

TOLERANCES UNLESS OTHERWISE STATED

DIMENSION mm	UP TO 100	100 TO 300	300 TO 1000	OVER 1000
FABRICATION	± 1.0	± 1.5	± 2.0	± 3.0
MACHINED PART	± 0.15	± 0.4	± 0.8	± 1.0

TITLE

POD WIRING - C903RV

(SIGNALS ISOLATION BOARD)

DO NOT SCALE

DRAWING NO. AB6315

ISSUE NO. 3

SHEET 14 OF 20

Soil Machine Dynamics

A3 CAD

ALL INTELLECTUAL PROPERTY RIGHTS SUBSISTING IN THESE DESIGNS ARE THE PROPERTY OF SOIL MACHINE DYNAMICS LTD. NO COPY IS TO BE MADE WITHOUT THE WRITTEN PERMISSION OF SOIL MACHINE DYNAMICS LTD. ANY PATENT APPLICATIONS, PATENTS AND/OR DESIGN APPLICATIONS, REGISTERED DESIGNS, DESIGN RIGHTS OR COPYRIGHT ARISING FROM OR CONTAINED IN THE DESIGNS ARE THE PROPERTY OF SOIL MACHINE DYNAMICS LTD AND ALL INFORMATION MUST BE HELD IN THE STRICTEST CONFIDENCE.

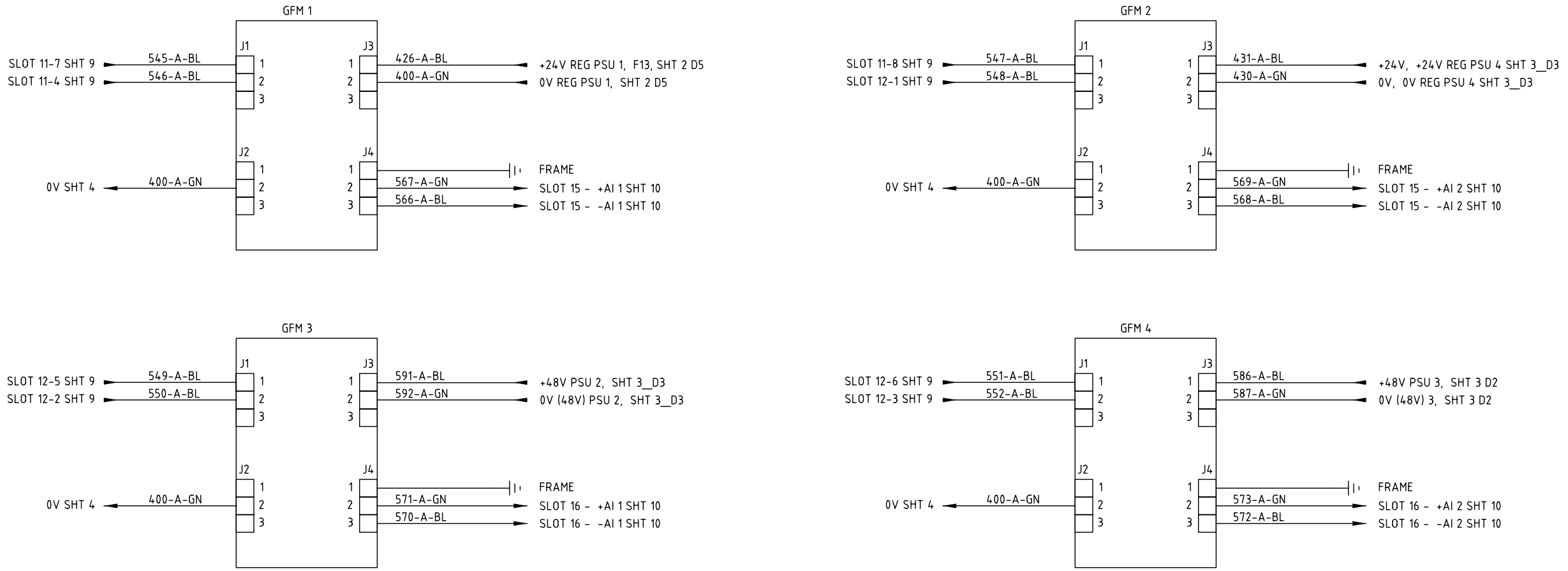

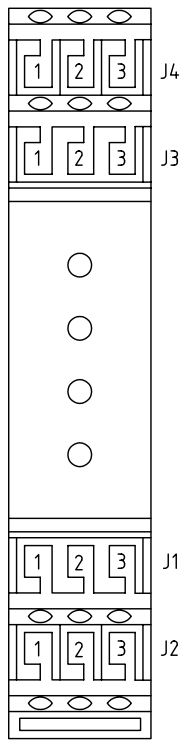

GFM FRONT VIEW

NO.	DATE	CHANGE	DRAWN	CHECK
1	09-01-08	AS BUILT.	P.S.	C.L.T.
2	28-04-08	GFM2 SUPPLY CABLES ADDED & AMENDED.	P.S.	C.L.T.
3	07-07-08	GFM1 - GFM4 CIRCUIT FUNCTIONS AMENDED.	P.S.	C.L.T.

MATERIAL	DIMENSIONS	SCALE	PROJECTION 3RD
-	-	-	

DESIGNED	DRAWN	DATE	CHECKED
C.L.T.	C.L.T.	10-08-07	I.M.P.

TOLERANCES UNLESS OTHERWISE STATED

DIMENSION mm	UP TO 100	100 TO 300	300 TO 1000	OVER 1000
FABRICATION	± 1.0	± 1.5	± 2.0	± 3.0
MACHINED PART	± 0.15	± 0.4	± 0.8	± 1.0

TITLE

POD WIRING - C903RV

(GROUND FAULT MONITORING BOARDS)

DO NOT SCALE

DRAWING NO. AB6315

ISSUE NO. 3

SHEET 15 OF 20

ALL INTELLECTUAL PROPERTY RIGHTS SUBSISTING IN THESE DESIGNS ARE THE PROPERTY OF SOIL MACHINE DYNAMICS LTD. NO COPY IS TO BE MADE WITHOUT THE WRITTEN PERMISSION OF SOIL MACHINE DYNAMICS LTD. ANY PATENT APPLICATIONS, PATENTS AND/OR DESIGN APPLICATIONS, REGISTERED DESIGNS, DESIGN RIGHTS OR COPYRIGHT ARISING FROM OR CONTAINED IN THE DESIGNS ARE THE PROPERTY OF SOIL MACHINE DYNAMICS LTD AND ALL INFORMATION MUST BE HELD IN THE STRICTEST CONFIDENCE.

Soil Machine Dynamics

A3 CAD

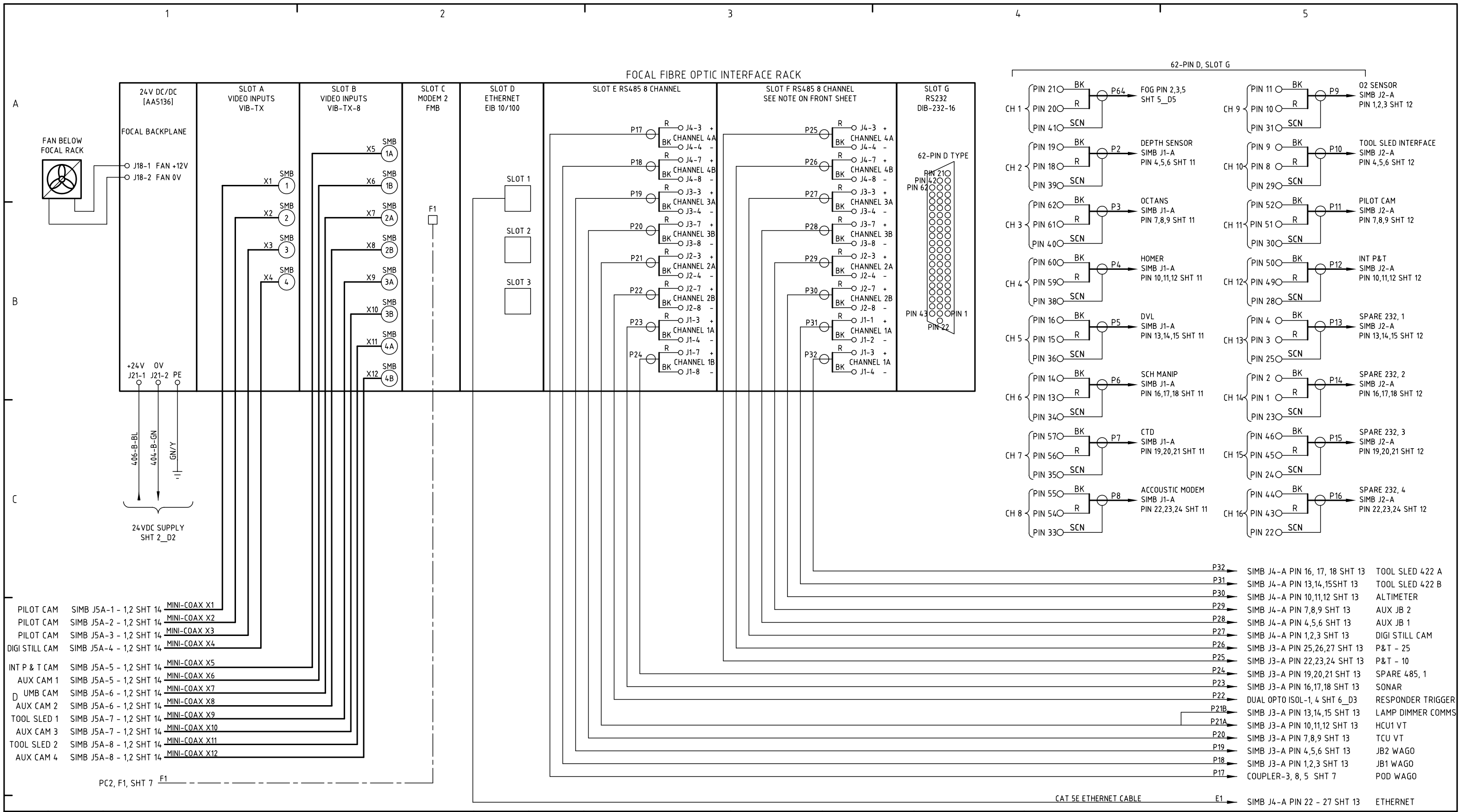

NO.	DATE	CHANGE	DRAWN	CHECK
1	09-01-08	AS BUILT.	P.S.	C.L.T.
2	28-04-08	NO CHANGE TO THIS SHEET.	P.S.	C.L.T.
3	07-07-08	P23 & P24 CIRCUIT FUNCTIONS AMENDED.	P.S.	C.L.T.

MATERIAL	DIMENSIONS	SCALE	PROJECTION 3RD
-	-	-	

DESIGNED	DRAWN	DATE	CHECKED
C.L.T.	C.L.T.	10-08-07	I.M.P.

TOLERANCES UNLESS OTHERWISE STATED

DIMENSION mm	UP TO 100	100 TO 300	300 TO 1000	OVER 1000
FABRICATION	± 1.0	± 1.5	± 2.0	± 3.0
MACHINED PART	± 0.15	± 0.4	± 0.8	± 1.0

TITLE

POD WIRING - C903RV

(FOCAL INTERFACE RACK)

DO NOT SCALE

DRAWING NO. AB6315

ISSUE NO. 3

SHEET 16 OF 20

Soil Machine Dynamics

A3 CAD

ALL INTELLECTUAL PROPERTY RIGHTS SUBSISTING IN THESE DESIGNS ARE THE PROPERTY OF SOIL MACHINE DYNAMICS LTD. NO COPY IS TO BE MADE WITHOUT THE WRITTEN PERMISSION OF SOIL MACHINE DYNAMICS LTD. ANY PATENT APPLICATIONS, PATENTS AND/OR DESIGN APPLICATIONS, REGISTERED DESIGNS, DESIGN RIGHTS OR COPYRIGHT ARISING FROM OR CONTAINED IN THE DESIGNS ARE THE PROPERTY OF SOIL MACHINE DYNAMICS LTD AND ALL INFORMATION MUST BE HELD IN THE STRICTEST CONFIDENCE.

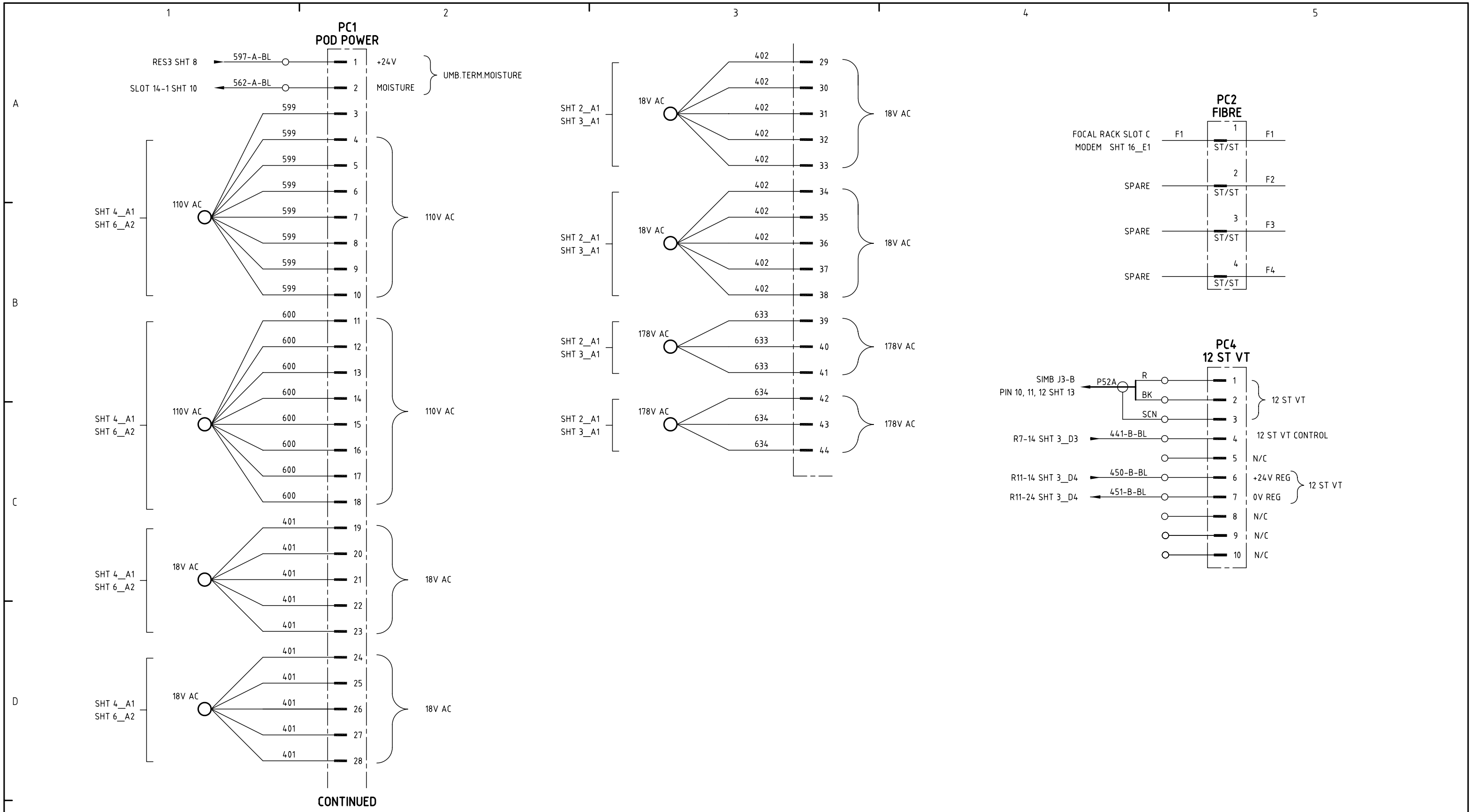

NO.	DATE	CHANGE	DRAWN	CHECK
1	09-01-08	AS BUILT.	P.S.	C.L.T.
2	28-04-08	CROSS REFERENCES CHANGED.	P.S.	C.L.T.
3	07-07-08	PC1 TERMINAL ARRANGEMENT & PC4 CIRCUIT FUNCTIONS AMENDED.	P.S.	C.L.T.

MATERIAL	DIMENSIONS	SCALE	PROJECTION 3RD
–	–	–	

DESIGNED	DRAWN	DATE	CHECKED
C.L.T.	C.L.T.	10-08-07	I.M.P.

TOLERANCES UNLESS OTHERWISE STATED

DIMENSION mm	UP TO 100	100 TO 300	300 TO 1000	OVER 1000
FABRICATION	± 1.0	± 1.5	± 2.0	± 3.0
MACHINED PART	± 0.15	± 0.4	± 0.8	± 1.0

TITLE

POD WIRING - C903RV

(FACEPLATE CONNECTOR - POD POWER)

DO NOT SCALE

DRAWING NO. AB6315

ISSUE NO. 3

SHEET 17 OF 20

Soil Machine Dynamics

A3 CAD

ALL INTELLECTUAL PROPERTY RIGHTS SUBSISTING IN THESE DESIGNS ARE THE PROPERTY OF SOIL MACHINE DYNAMICS LTD. NO COPY IS TO BE MADE WITHOUT THE WRITTEN PERMISSION OF SOIL MACHINE DYNAMICS LTD. ANY PATENT APPLICATIONS, PATENTS AND/OR DESIGN APPLICATIONS, REGISTERED DESIGNS, DESIGN RIGHTS OR COPYRIGHT ARISING FROM OR CONTAINED IN THE DESIGNS ARE THE PROPERTY OF SOIL MACHINE DYNAMICS LTD AND ALL INFORMATION MUST BE HELD IN THE STRICTEST CONFIDENCE.

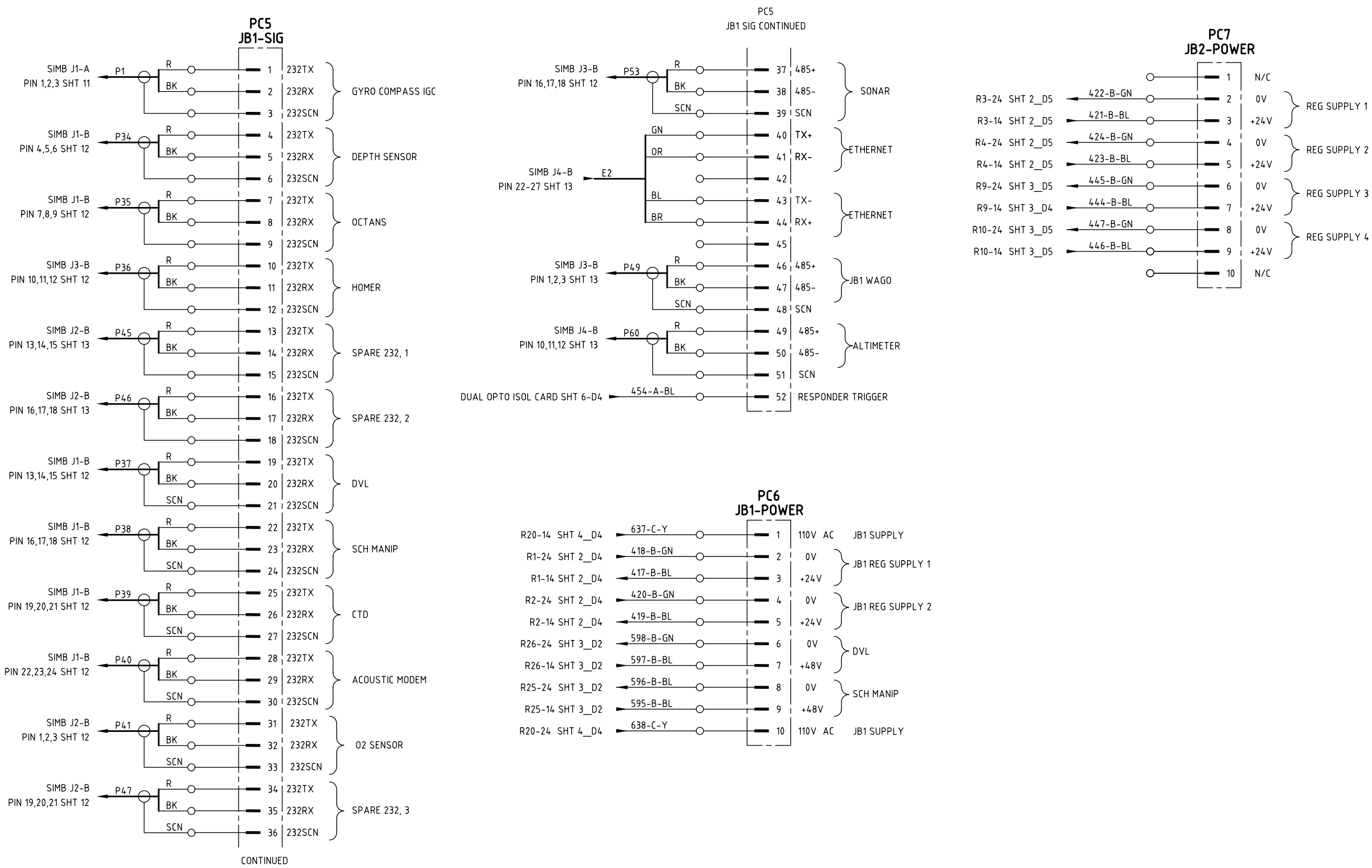

NO.	DATE	CHANGE	DRAWN	CHECK
1	09-01-08	AS BUILT.	P.S.	C.L.T.
2	28-04-08	CROSS REFERENCES CHANGED.	P.S.	C.L.T.
3	07-07-08	PC7 TERMINAL FUNCTIONS AMENDED.	P.S.	C.L.T.

MATERIAL: –
DIMENSIONS: –
SCALE: –
PROJECTION 3RD

DESIGNED: C.L.T.
DRAWN: C.L.T.
DATE: 10-08-07
CHECKED: I.M.P.

TOLERANCES UNLESS OTHERWISE STATED

DIMENSION mm	UP TO 100	100 TO 300	300 TO 1000	OVER 1000
FABRICATION	± 1.0	± 1.5	± 2.0	± 3.0
MACHINED PART	± 0.15	± 0.4	± 0.8	± 1.0

TITLE
POD WIRING - C903RV
(FACEPLATE CONNECTORS)

DO NOT SCALE

DRAWING NO. AB6315

ISSUE NO. 3

Soil Machine Dynamics

A3 CAD

SHEET 18 OF 20

ALL INTELLECTUAL PROPERTY RIGHTS SUBSISTING IN THESE DESIGNS ARE THE PROPERTY OF SOIL MACHINE DYNAMICS LTD. NO COPY IS TO BE MADE WITHOUT THE WRITTEN PERMISSION OF SOIL MACHINE DYNAMICS LTD. ANY PATENT APPLICATIONS, PATENTS AND/OR DESIGN APPLICATIONS, REGISTERED DESIGNS, DESIGN RIGHTS OR COPYRIGHT ARISING FROM OR CONTAINED IN THE DESIGNS ARE THE PROPERTY OF SOIL MACHINE DYNAMICS LTD AND ALL INFORMATION MUST BE HELD IN THE STRICTEST CONFIDENCE.

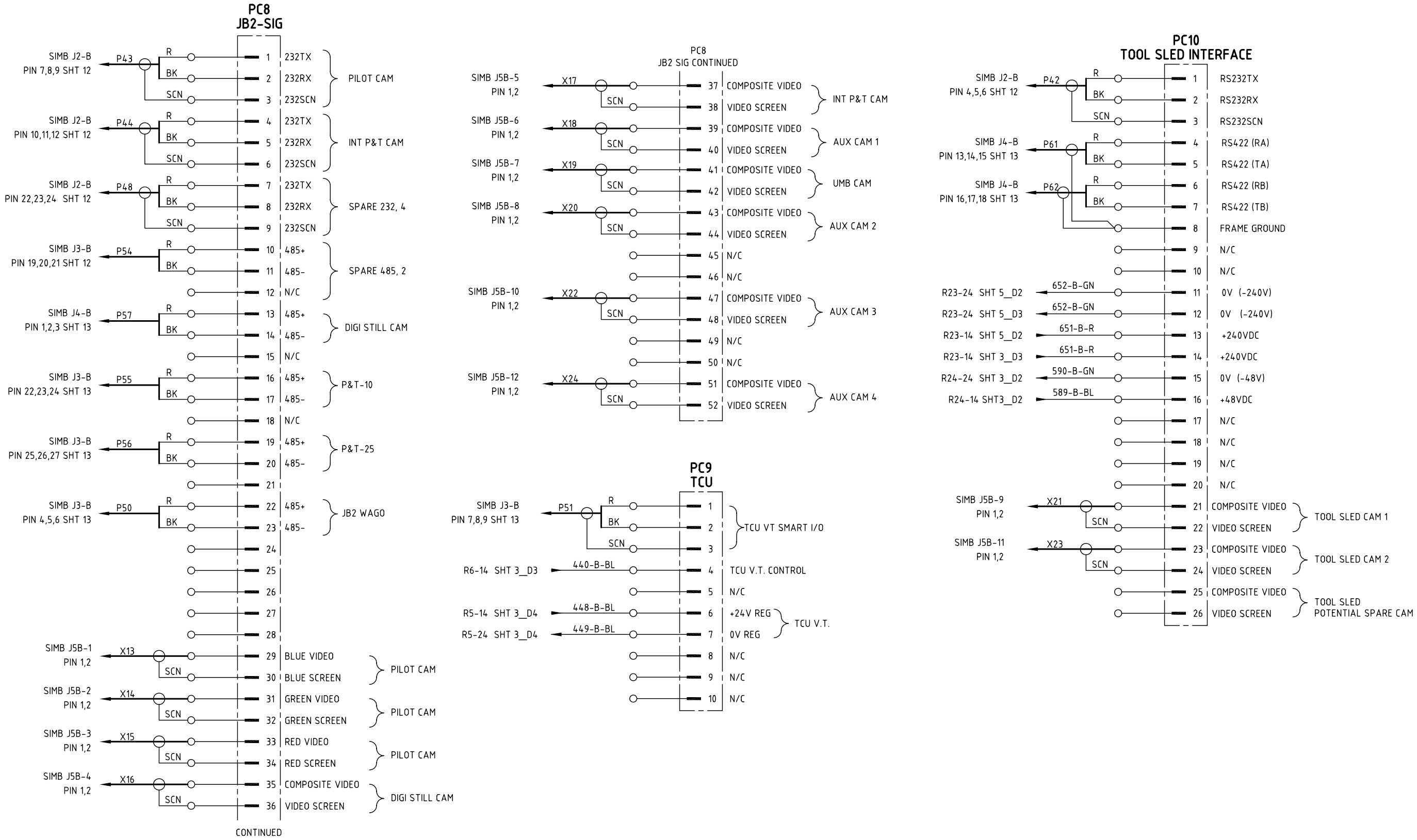

NO.	DATE	CHANGE	DRAWN	CHECK
1	09-01-08	AS BUILT.	P.S.	C.L.T.
2	28-04-08	CROSS REFERENCE CHANGED.	P.S.	C.L.T.
3	07-07-08	PC9 TERMINAL FUNCTIONS AMENDED.	P.S.	C.L.T.

MATERIAL	DIMENSIONS	SCALE	PROJECTION 3RD
–	–	–	

DESIGNED	DRAWN	DATE	CHECKED
C.L.T.	C.L.T.	10-08-07	I.M.P.

TOLERANCES UNLESS OTHERWISE STATED

DIMENSION mm	UP TO 100	100 TO 300	300 TO 1000	OVER 1000
FABRICATION	± 1.0	± 1.5	± 2.0	± 3.0
MACHINED PART	± 0.15	± 0.4	± 0.8	± 1.0

TITLE

POD WIRING - C903RV

(FACEPLATE CONNECTORS)

DO NOT SCALE

DRAWING NO. AB6315

ISSUE NO. 3

SHEET 19 OF 20

Soil Machine Dynamics

A3 CAD

ALL INTELLECTUAL PROPERTY RIGHTS SUBSISTING IN THESE DESIGNS ARE THE PROPERTY OF SOIL MACHINE DYNAMICS LTD. NO COPY IS TO BE MADE WITHOUT THE WRITTEN PERMISSION OF SOIL MACHINE DYNAMICS LTD. ANY PATENT APPLICATIONS, PATENTS AND/OR DESIGN APPLICATIONS, REGISTERED DESIGNS, DESIGN RIGHTS OR COPYRIGHT ARISING FROM OR CONTAINED IN THE DESIGNS ARE THE PROPERTY OF SOIL MACHINE DYNAMICS LTD AND ALL INFORMATION MUST BE HELD IN THE STRICTEST CONFIDENCE.

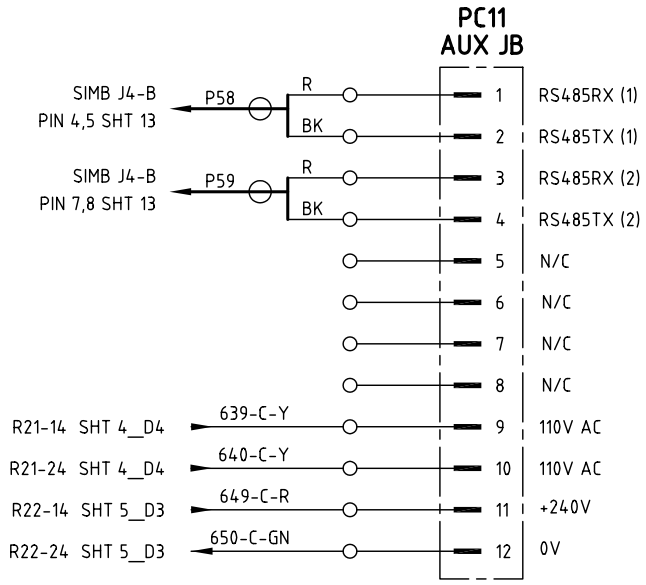

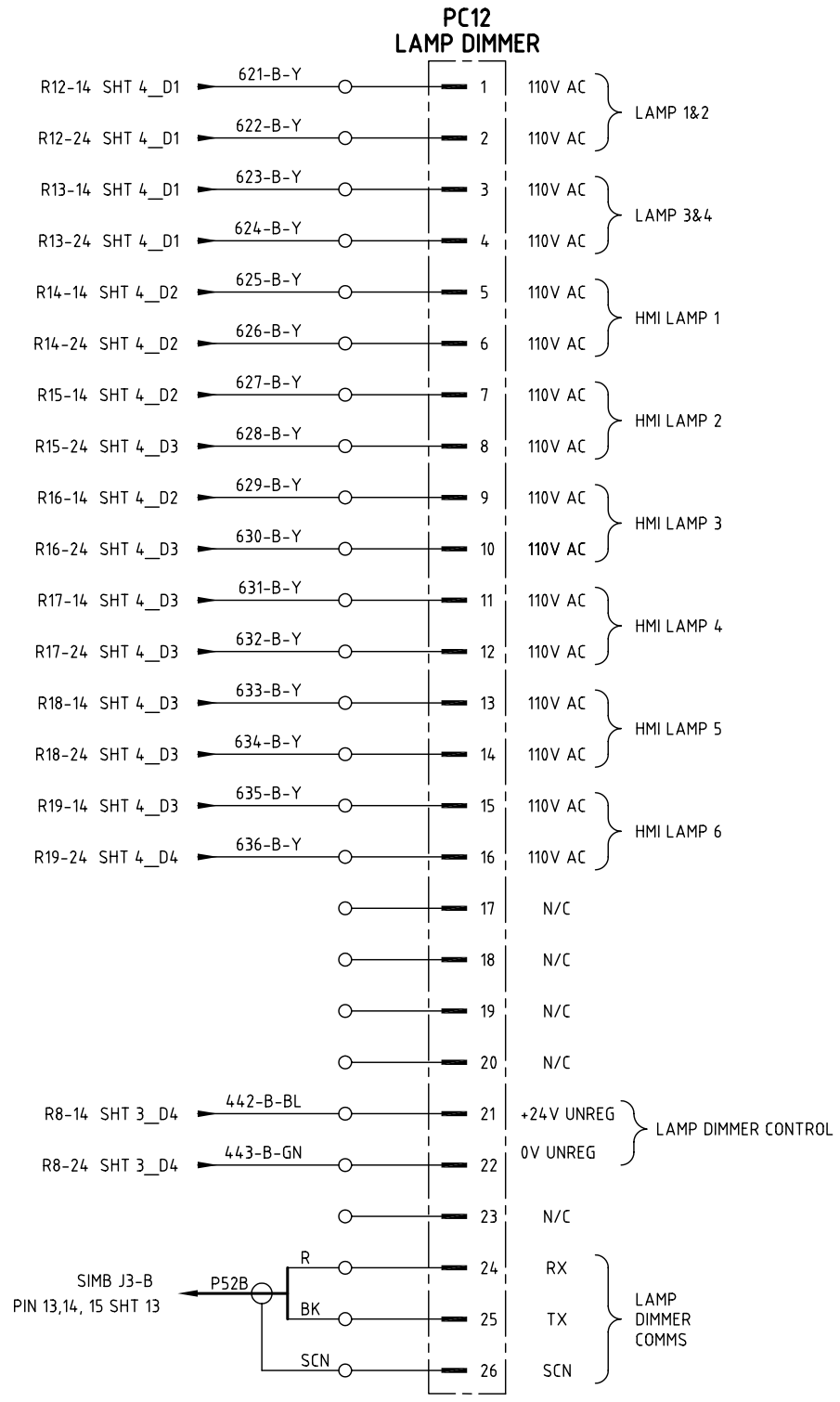

NO.	DATE	CHANGE	DRAWN	CHECK
1	09-01-08	AS BUILT.	P.S.	C.L.T.
2	28-04-08	CROSS REFERENCES CHANGED	P.S.	C.L.T.
3	07-07-08	NO CHANGES TO THIS SHEET.	P.S.	C.L.T.

MATERIAL	DIMENSIONS	SCALE	PROJECTION 3RD
–	–	–	

DESIGNED	DRAWN	DATE	CHECKED
C.L.T.	C.L.T.	10-08-07	I.M.P.

TOLERANCES UNLESS OTHERWISE STATED

DIMENSION mm	UP TO 100	100 TO 300	300 TO 1000	OVER 1000
FABRICATION	± 1.0	± 1.5	± 2.0	± 3.0
MACHINED PART	± 0.15	± 0.4	± 0.8	± 1.0

TITLE

POD WIRING - C903RV
(FACEPLATE CONNECTORS)

DO NOT SCALE

DRAWING NO. AB6315

ISSUE NO. 3

SHEET 20 OF 20

Soil Machine Dynamics

A3 CAD

ALL INTELLECTUAL PROPERTY RIGHTS SUBSISTING IN THESE DESIGNS ARE THE PROPERTY OF SOIL MACHINE DYNAMICS LTD. NO COPY IS TO BE MADE WITHOUT THE WRITTEN PERMISSION OF SOIL MACHINE DYNAMICS LTD. ANY PATENT APPLICATIONS, PATENTS AND/OR DESIGN APPLICATIONS, REGISTERED DESIGNS, DESIGN RIGHTS OR COPYRIGHT ARISING FROM OR CONTAINED IN THE DESIGNS ARE THE PROPERTY OF SOIL MACHINE DYNAMICS LTD AND ALL INFORMATION MUST BE HELD IN THE STRICTEST CONFIDENCE.